**Laboratori Nazionali di Frascati**

Submitted to Nucl. Instr. & Meth. in Physics Reserch

LNF-92/079 (P)
26 Ottobre 1992

Maurizio Leone, Luciano Trasatti, Giovanni Stefani, Lorenzo Avaldi:

# PARROT: A FIBER OPTIC LINK FOR PARTICLE DETECTORS

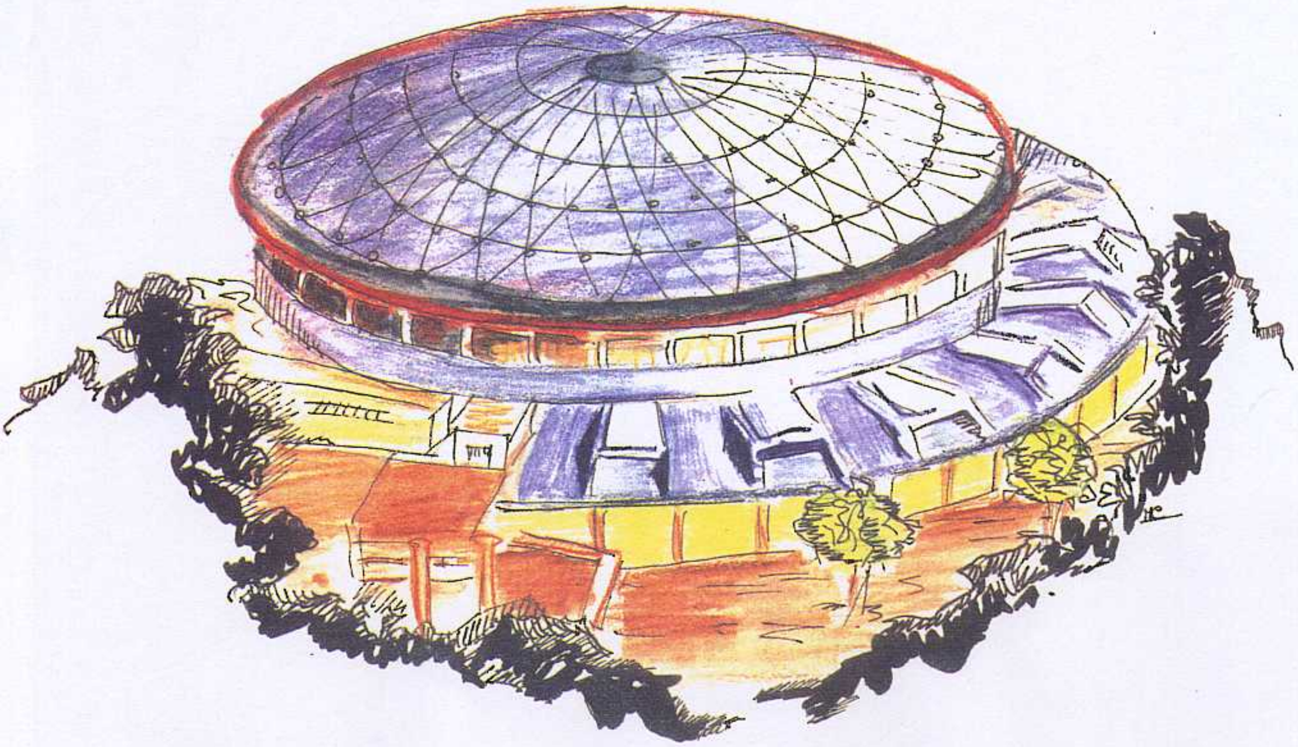

Servizio Documentazione
dei Laboratori Nazionali di Frascati
P.O. Box, 13 - 00044 Frascati (Italy)

INFN - Laboratori Nazionali di Frascati
Servizio Documentazione

LNF-92/079 (P)
26 Ottobre 1992

# PARROT: A FIBER OPTIC LINK FOR PARTICLE DETECTORS

Maurizio Leone, Luciano Trasatti
INFN - Laboratori Nazionali di Frascati, P. O. Box 13, I-00044 Frascati

Giovanni Stefani
Universita' di Roma 1 - La Sapienza, Dipartimento di Fisica - Via Aldo Moro, 5 00185 Roma

Lorenzo Avaldi
CNR - Istituto Metodologie Avanzate Inorganiche - Area della ricerca di Roma - Montelibretti (Rm)

## ABSTRACT

The fiber optic technology has been used to build a transmitter - receiver system capable of delivering channeltron or PM tube signals through a few hundred meter span. The intrinsic immunity of optical fibers to e.m. noise has been used to reduce noise problems in an experimental apparatus equipped with two electrostatic analyzers for coincidence (e, 2e) spectroscopy. A coincidence energy separation spectrum of He, used for calibration of the apparatus energy scale, has been measured using fiber optic links instead of coaxial cables. The system was completely built using cheap and easily available commercial components. The results show that fiber optic links could become a viable technique for noise reduction, high voltage decoupling and low temperature calorimeters signal transfer.

## 1. - INTRODUCTION

The suppression of e.m. pick-up noise is a problem shared by most of the experimental techniques characterized by a low signal to noise ratio. This problem can be circumvented, in the case of uncorrelated measurements, by several different methodologies, such as lock-in amplifiers, etc. This problem is even more severe in the case of coincidence experiments because the noise is picked up simultaneously by the two amplifiers and results in correlated events indistinguishable from true coincidence events. The problem is usually solved by sensing the e.m. noise and inhibiting the coincidence acquisition. This method, however, requires the time structure of the noise to be known and stationary, and introduces an unavoidable dead time. The noise suppression obtained using fiber optic transmission lines overcomes both these difficulties.

We have built an analog transmitter receiver system (PARROT, PARticle detectors Receiver and Optical Transmitter), using multimode, graded index optical fibers to carry the signals from a channeltron detector to a discriminator a few tens of meters away. The system has been tested on an (e,2e) coincidence spectrometer at IMAI, CNR, Area della Ricerca di Roma, Montelibretti (Rm) [1].

The transmitter uses an LED diode and a transimpedance amplifier in a battery powered case mounted directly outside the experiment vacuum chamber. The receiver was a PIN diode coupled to a two stage amplifier housed in a NIM module and producing signals sufficient to drive a discriminator.

An extensive series of tests has performed comparing the PARROT behavior with the standard coaxial cable link.

They include noise and signal vs. noise measurements and an energy calibration of the coincidence apparatus by measuring the He 1s electron ionization cross section. An overall reduction of one order of magnitude in the accidental coincidence rate was achieved.

The system has been designed using easily available commercial components. Economy has been a design goal, keeping in mind detectors with high number of channels. Nevertheless, the results are very encouraging and show several ways to improve over the prototype, specializing it for analog or digital transmission.

## 2 - THE DEVICE

### 2.1 - Transmitter

The transmitter is composed of a transimpedance amplifier (Signetics NE5212) followed by an emitter follower stage (2N2222) driving an LED diode (MOTOROLA MFOE3202).

The emitter follower stage generates enough current to drive the LED and to bias it in the linear region.

The input impedance is 110Ω.

Fig. 1 shows the circuit diagram of the transmitter.

A small (35 x 45 $mm^2$) double sided printed circuit board houses the optical connector, the LED and the transimpedance amplifier.

The circuit has been enclosed in a metal box carrying a BNC connector that plugged directly on the feed-through to the vacuum chamber carrying the channeltron signal.

Although a connector for the power supply was available, the circuit was powered using four 1.5V batteries contained in the metal box to increase the noise immunity.

### 2.2 - Optical Fiber

A 5 m long 50/125 μm diameter graded index optical fiber (Pirelli) has been used to connect the transmitter to the receiver. We have chosen a multimode instead of a single mode fiber because the distance to be traveled by the link was very small.

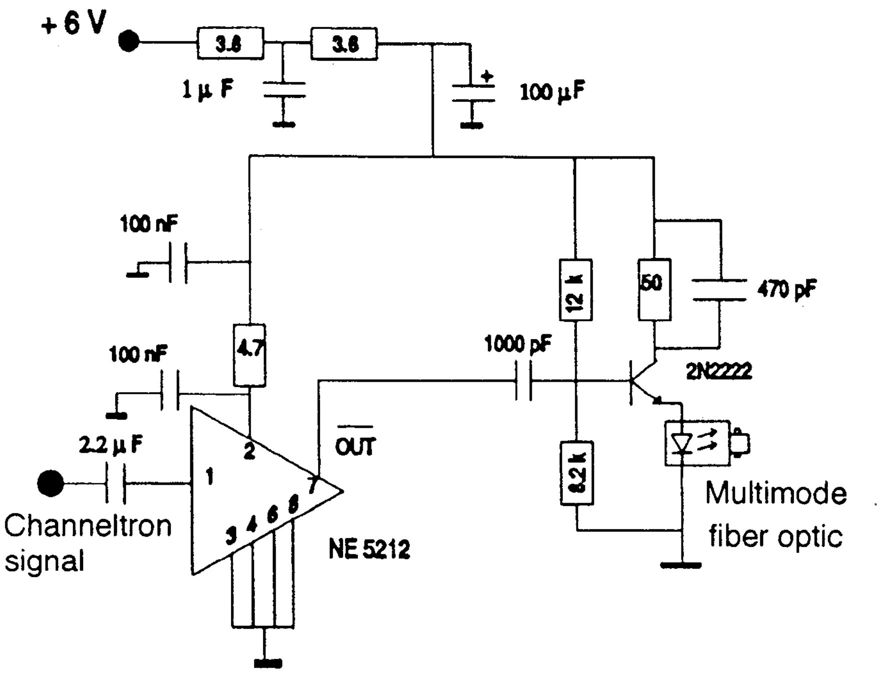

**FIG.1** – Circuit diagram of the PARROT transmitter.

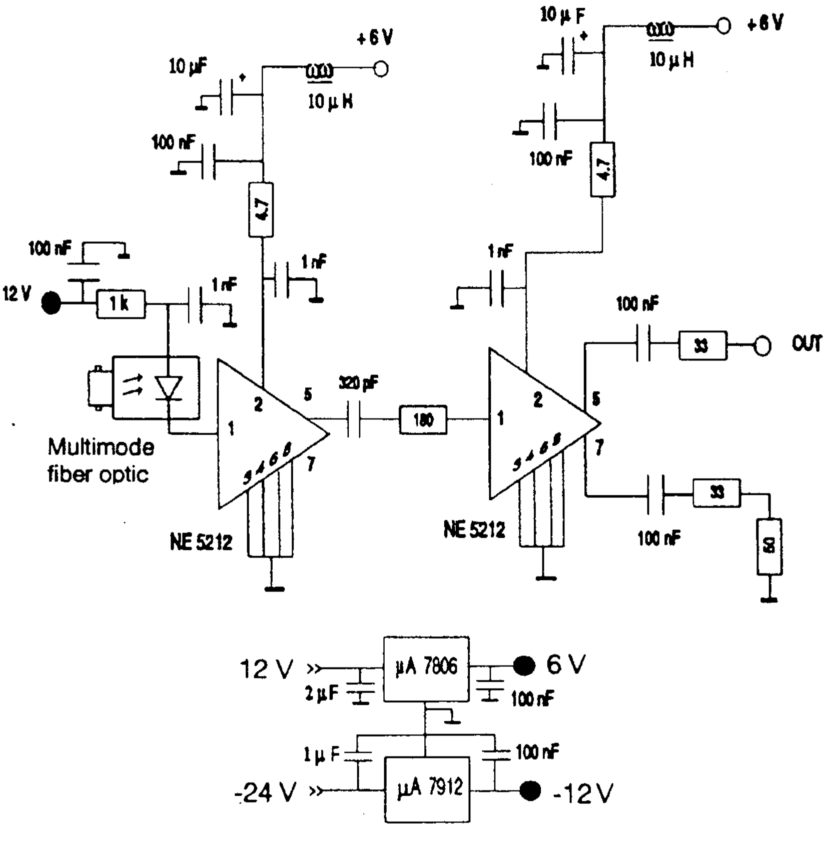

**FIG. 2** – Circuit diagram of the PARROT receiver.

With our setup, the optical fiber could have been a few hundred meters long before any effect of degradation due to the fiber itself became apparent. On the other hand, single mode fibers are much more expensive and critical to use, because they require high cost connectors and Laser diodes as transmitters.

### 2.3 - Receiver

The receiver was built into a NIM module for compatibility with the rest of the data acquisition system, which uses NIM modules for signal conditioning and CAMAC for data acquisition by an MS-DOS computer.

The signal detected by a PIN diode (RCA C30807) was amplified by two stages in cascade to an output impedance of 50Ω and to a level acceptable by the discriminator (Canberra 1428).

The same NE5212 amplifiers used in the transmitter were chosen because their performance is adequate and they require very few external components.

Power supply regulators were used to increase the immunity to noise.

Fig.2 shows the circuit diagram of the receiver.

## 3 - PROTOTYPE TEST

We have performed a set of measurements in the laboratory using a pulser to simulate the channeltron detector.

The rise time of the transmitter measured on the LED was 4±1 ns, while the rise time of the total system was 7±1 ns.

Fig.3 shows the linearity curve of the entire system, using an input rectangular signal with a width of 20 ns.

While neither of the two measurements is particularly good, we must remember that the PARROT is a compromise between an analog and a digital system, built to test the possibilities of the fiber optic technique. It is to be expected that specialized systems would show better results.

Nevertheless, we have installed the PARROT on a real spectrometer to try it out in the field.

## 4 - FIELD TESTS

The PARROT has been tested extensively on an electron impact spectrometer designed for coincidence measurements. The apparatus is made up of a cylindrical vacuum chamber containing an electron beam source, an effusive gaseous beam and two electrostatic analyzers independently movable on the scattering plane. The analyzers collect the two electrons, scattered and ejected, by two channeltron electron multipliers. The signals are amplified immediately outside the vacuum chamber and sent on two 10 m long coaxial cables (RG58) to two discriminators and later to a TDC. Fig.4a and 4b show the exeperimental layout and the electronics schematic diagram.

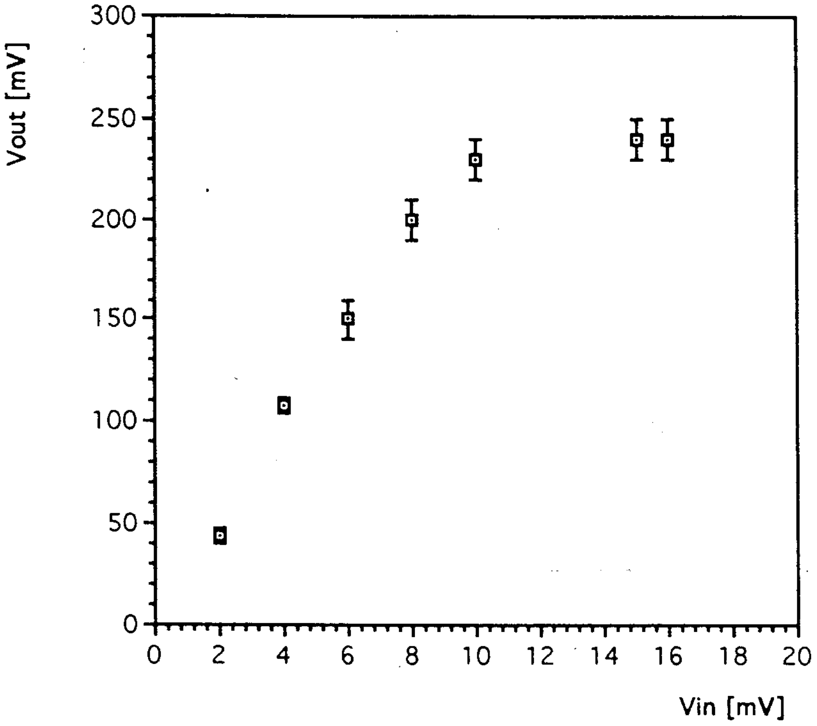

FIG. 3 – Linearity of the PARROT system.

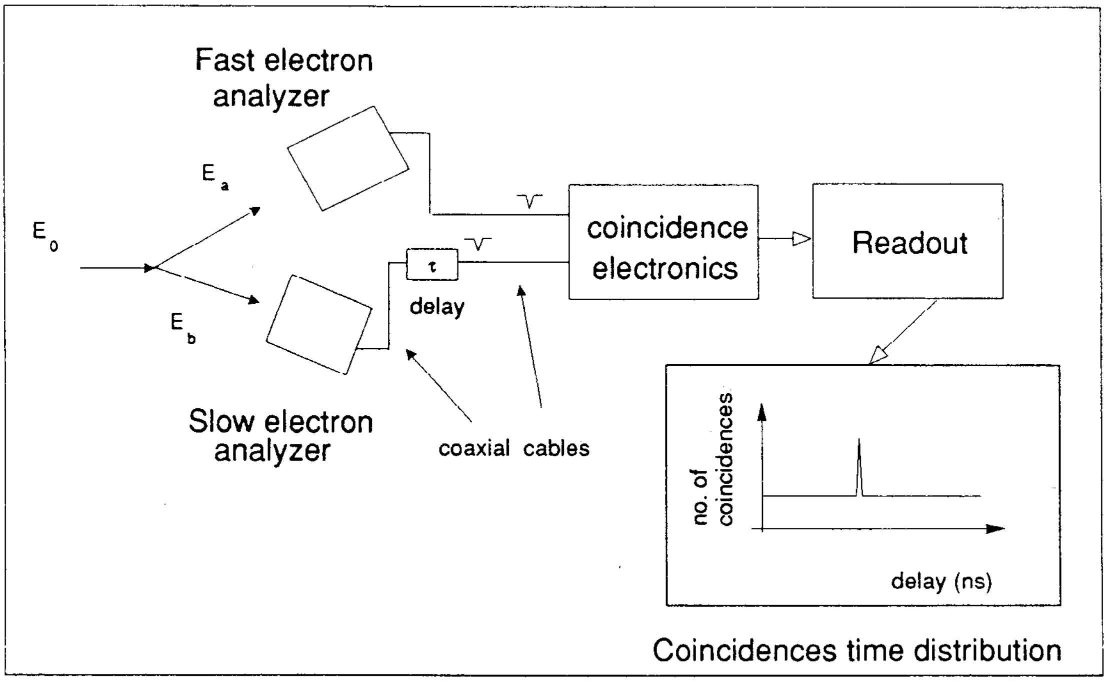

**FIG. 4a** – Schematic layout of the experimental apparatus

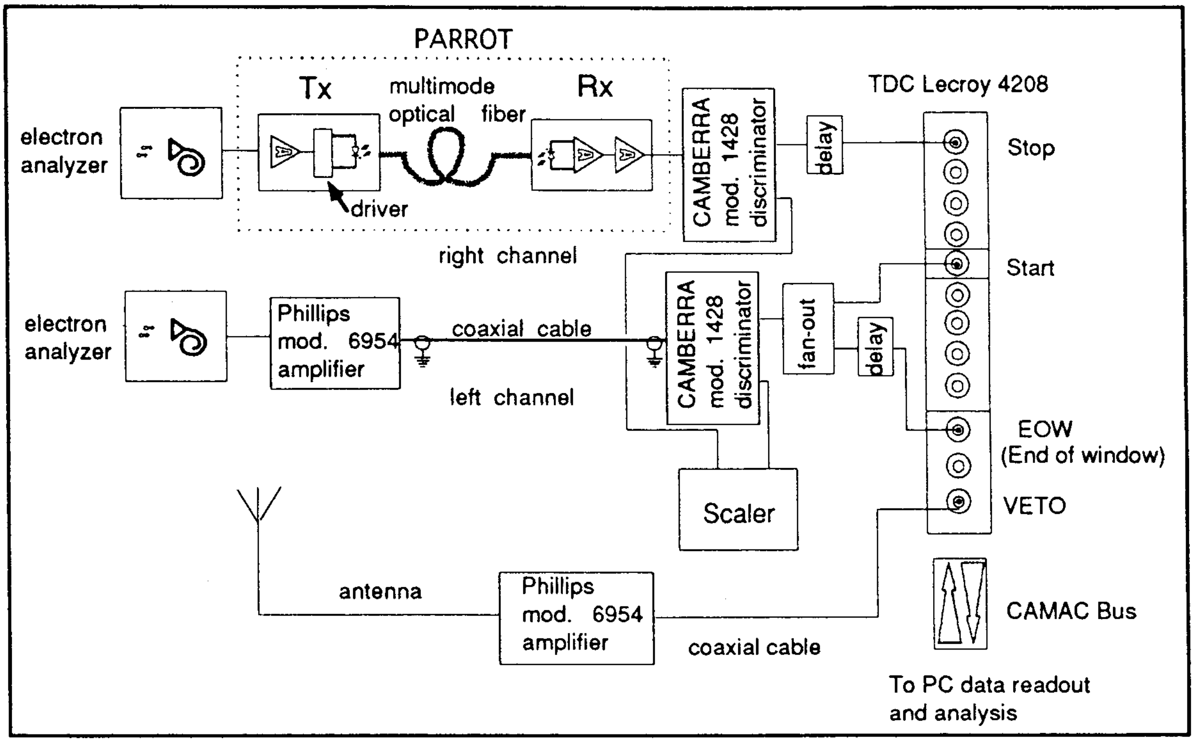

**FIG. 4b** – Schematic diagram of the experimental apparatus.

The typical time spectrum measured with this apparatus is shown in Fig.5, where the number of coincidences is plotted vs. the time delay between the start and stop pulses generated by the scattered and ejected electrons respectively.

## 4.1 - Noise reduction tests

During the tests the PARROT has been substituted to one of the two amplifier-coaxial cable systems, and the behavior of the spectrometer has been analyzed comparing the two situations.

One of the experimental problems with this spectrometer is the presence, in an adjacent laboratory, of a 10MW pulsed laser, which tends to induce spurious coincidences on the transmission lines. This problem is usually cured inserting a VETO system driven by an antenna and shaped to a 1 µs duration. Although this circuit is very efficient in e.m. noise rejection it implies the knowledge of the time duration of the noise pulses to determine the shaping time.

The induction noise was simulated in our tests by a Tesla high voltage discharge generator.

Fig.6 shows the number of coincidences obtained in 100 s with coaxial cables a) and with the PARROT b) when the HV of one of the two channeltrons was reduced to one half the nominal value, keeping all the other parameters of the detector unaltered. In this condition only spurious coincidences were detected. The antenna Veto was disconnected. The standard arrangement detected 30 accidental coincidences, while when the PARROT was substituted to one of the coaxial cables their number went down to 3.

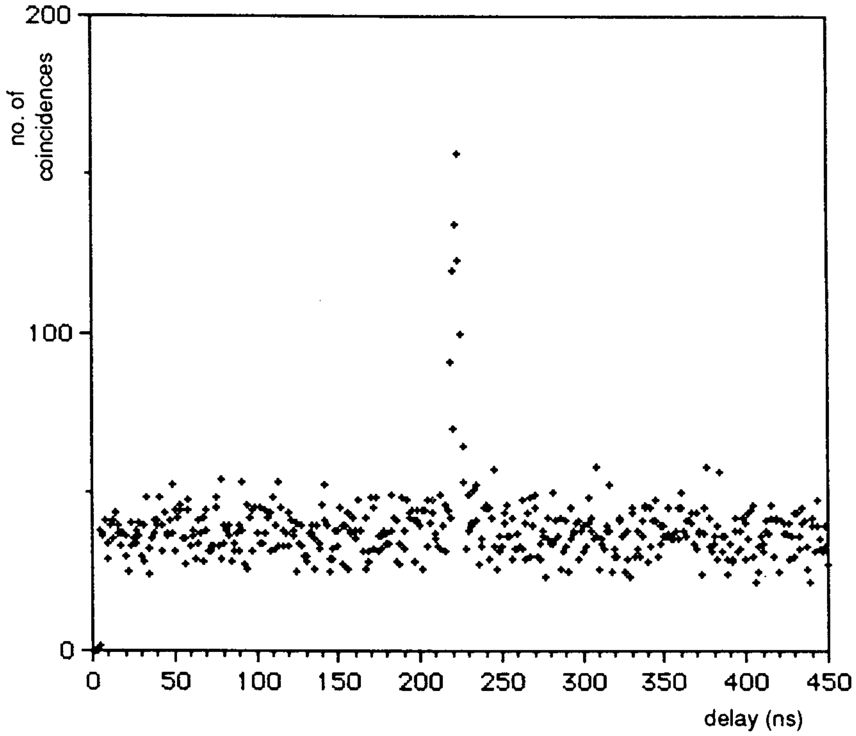

**FIG. 5** – Typical coincidence spectrum vs. delay time between the two channels of an (e, 2e) measurement.

Another measurement was performed using a different setup. In this experiment the two transmission channels were disconnected from the channeltron detectors and connected to a pulser. The Tesla generator was again functioning and the antenna Veto was disconnected. Fig.7 shows the time delay spectrum with a) coaxial cables and b) the PARROT.

The Signal/Noise ratio measured as the ratio of the number of coincidences in the peak to the number of coincidence in the whole TDC range (500 ns) outside the peak region was, for the coaxial cable and the PARROT respectively, 4000±1500 and 200±20.

The noise distribution can be explained as follows: The discriminator connected to the TDC Start has a lower threshold than the discriminator connected to the TDC Stop. If the noise is injected at the input of the two transmission channels, and since the shape of the noise pulses presents a long rise time, the Start discriminator will fire before the Stop one, generating a time distribution of the noise pulses to the right of the coincidence peak. Shape variations in the noise pulses justify the time spread.

As a conclusion, it appears that the use of the PARROT decreases the number of accidental coincidences by an order of magnitude.

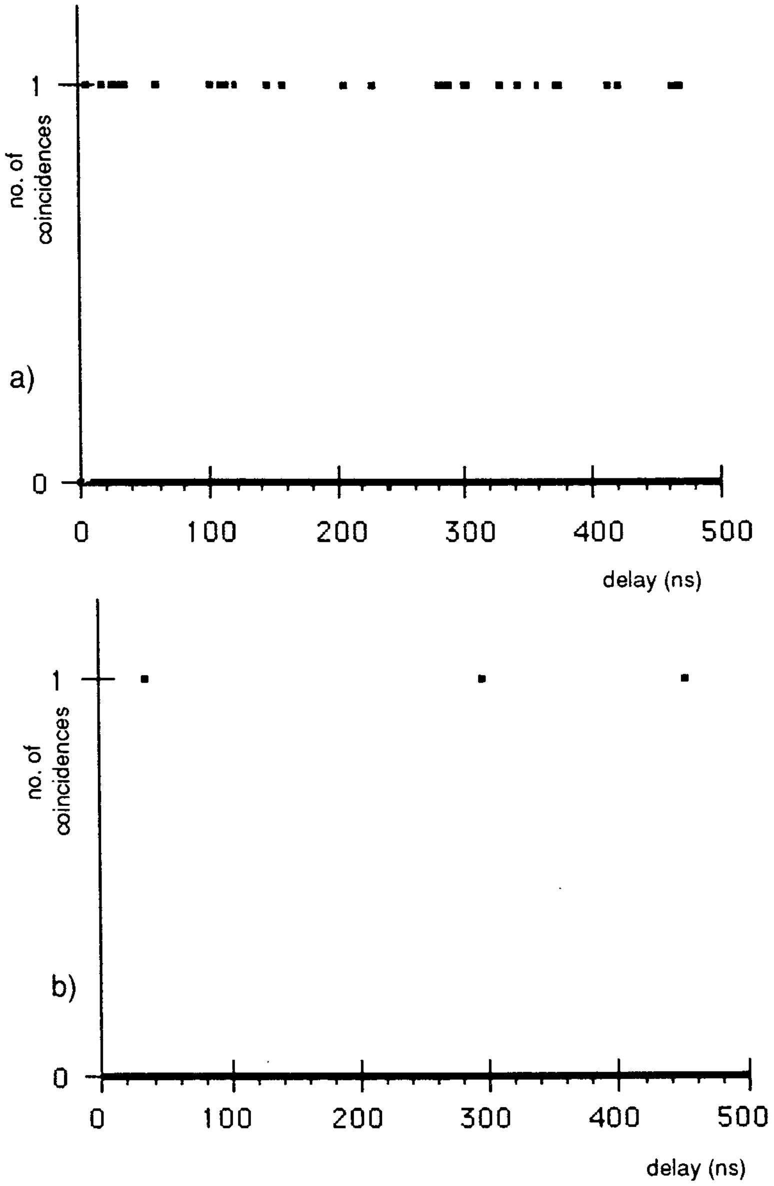

**FIG. 6** – Number of accidental coincidences in 100 s using: a) coaxial cable; b) PARROT link.

## 4.2 - Spectrometer energy calibration

After having tested that the noise reduction of the PARROT is significant, we applied the setup to a regular (e, 2e) measurement in order to investigate for possible problems.

An energy calibration of the spectrometer was performed by measuring the Helium energy separation spectrum, whose ionization energy is well known. In this experiment the energy accepted by one of the two electrostatic analyzers was kept constant, while the energy accepted by the other was varied. The result of this measurement is shown in fig. 8, where the coincidence rate is reported versus the separation energy, i. e. the kinetic energy balance between initial and final unbound electrons. No problems were found in using the PARROT for this measurement, which lasted three hours.

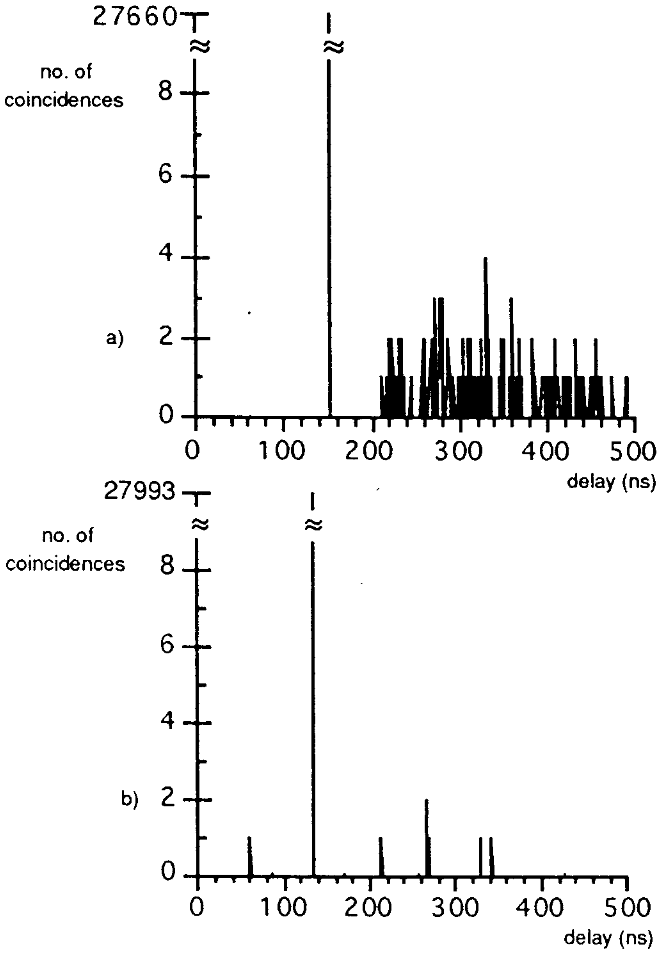

**FIG. 7** – Coincidence time spectrum generated by divided pulser signals using:a)coaxial cable; b) PARROT link.

The position of the peak in fig. 8, together with the known value of the 1s ionization potential constitute the calibration of the kinetic energy of the ejected electron. The absolute energy of the primary beam and of the scattered one had been independently calibrated.

## 5 - CONCLUSIONS

The results of our tests show that it is possible to adapt data transmission equipment and techniques to the transmission of particle detector signals. Several advantages can be gained using this approach:

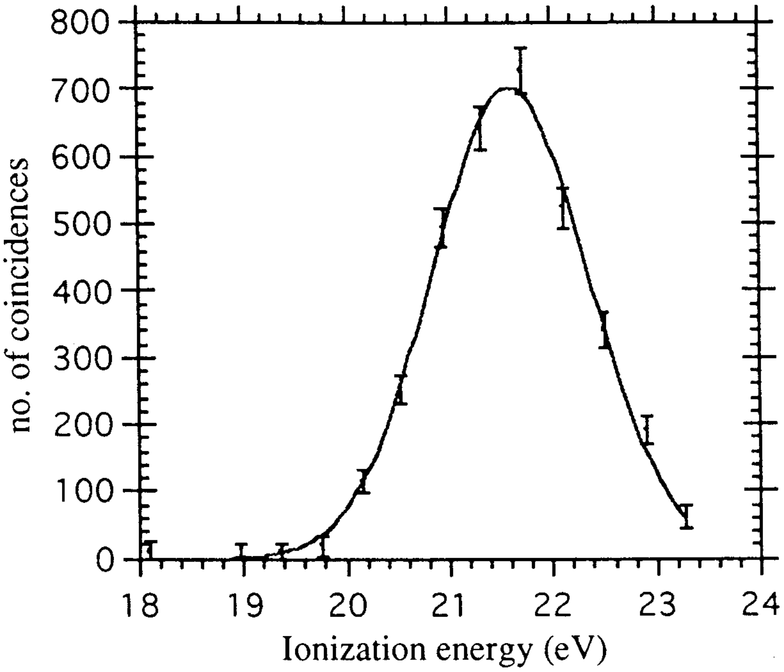

**FIG. 8** – He 1s ionization spectrum.

- Transmission length can be increased at least to a few hundred meters without signal degeneration, even using the most inexpensive of fiber optic technology;
- A very high noise immunity can be achieved;
- Optical fibers are much smaller and lighter than coaxial cables: this can be a very important argument for experiments with a large number of channels;
- No ground connection is required;
- Finally, an INFN group at Milano is using fiber optic connections similar to the one we have built to extract signals from a liquid Argon calorimeter. Since the thermal conductivity of glass is much less than copper, a big saving in terms of cooling power can be achieved.

An inexpensive possible application of fiber optics in the field of pulse counting has been our goal in developing and building this prototype system. The results, however, are very encouraging and make us believe that by specializing the PARROT system either for analog or for digital pulses much better results in terms of linearity, speed and noise rejection could be achieved.

## REFERENCES

1) L. Avaldi et al: Journal of Physics B: Atomic and Molecular Physics 20 (1987) 582.
2) G. Battistoni, Sezione INFN Milano: Private communication