ISTITUTO NAZIONALE DI FISICA NUCLEARE

Laboratori Nazionali
di Legnaro

INFN/TC-85/23
13 Dicembre 1985

R.Cherubini, F.Jimenez, R.Nino, R.Policroniades, B.M.Stievano, A.Varela, G.Moschini, G.Galeazzi, C.Manduchi, M.T.Russo Manduchi and G.F.Segato:

DESIGN, CONSTRUCTION AND TEST OF THE ASSOCIATED PARTICLE METHOD VACUUM SCATTERING CHAMBER OF THE L.N.L. NEUTRON FACILITY

Servizio Documentazione
dei Laboratori Nazionali di Frascati

Istituto Nazionale di Fisica Nucleare
Laboratori Nazionali di Legnaro

INFN/TC-85/23
13 Dicembre 1985

DESIGN, CONSTRUCTION AND TEST OF THE ASSOCIATED PARTICLE METHOD VACUUM SCATTERING CHAMBER OF THE L.N.L. FAST NEUTRON FACILITY

R.Cherubini, F.Jimenez(*), R.Nino, R.Policroniades(*), B.M.Stievano, A.Varela(*)
INFN - Laboratori Nazionali di Legnaro, 35020 Legnaro (Padova), Italy

G. Moschini
Dipartimento di Fisica "Galileo Galilei", Università di Padova, 35131 Padova, Italy,
and INFN - Laboratori Nazionali di Legnaro, 35020 Legnaro (Padova), Italy

G.Galeazzi, C.Manduchi, M.T.Russo Manduchi and G.F.Segato
Dipartimento di Fisica "Galileo Galilei", Università di Padova, 35131 Padova, Italy,
and INFN - Sezione di Padova, 35131 Padova, Italy.

1 INTRODUCTION

The request for reliable nuclear data [1,2], in particular for neutron cross section measurements from 5 to 14 MeV, is still open, and has nowdays been enhanced by the need of precise fast neutron data for fusion reactor development.

In order to generate this information it is convenient to have a flexible "monoenergetic" fast neutron facility without the limitations imposed by the use of extensive shielding material and undesirable neutron and gamma backgrounds.

(*) On leave: Instituto Nacional de Investigationes Nucleares, Mexico, and IAEA Fellows

It has been proven [3-7] that the Associated Particle Method or Technique (APM or APT) with the $D(d,n)^3He$ reaction at incident energies up to 14 MeV, can produce good quality neutron beams of known flux with energies between 2 and 14 MeV. Moreover, this energy range can be extended to higher neutron energies by the use of the more exoergic $T(d,n)^4He$ reaction.

The APM takes advantage of the time and energy correlation between a neutron and the "associated" recoil nucleus in agreement with the kinematics of the reaction; and in practice, the energy of the neutrons and the width of the beam are determined by the position and angular acceptance of the associated particle detector (usually a "ΔE" silicon surface barrier detector).
Neutron detection and counting is performed by a standard (electronic) coincidence arrangement between this "ΔE" detector and a fast response neutron detector (usually an organic scintillator).

With these ideas in mind, and the additional necessity of performing absolute calibration of neutron detectors, it was decided at the Laboratori Nazionali di Legnaro - Padova, Italy (L.N.L.) to construct a multipurpose scattering vacuum chamber adequate for fast neutron spectroscopy with the associated particle technique.

2 SCATTERING VACUUM CHAMBER

The design of the scattering chamber was decided to have the following characteristics:

- a rotating target assembly;
- easy aligneable collimator systems;
- reproducible detector mountings;
- a thin neutron window.

An overall view of the vacuum chamber, based on a design developed in the L.N.L., is presented in Figure 1 (For details see Appendix).
The basic components, illustrated in the figure, are:

1. External cilindrical body with interchangeable 137° large thin window;
2. Rotating target assembly suitable for self-supporting deuterated polyethylene and thin Tritium-Titanium targets;
3. Charged particle detector table;
4. Beam collimator system;
5. External scattering table with slidding neutron detector mounting;
6. Automatic vacuum system.

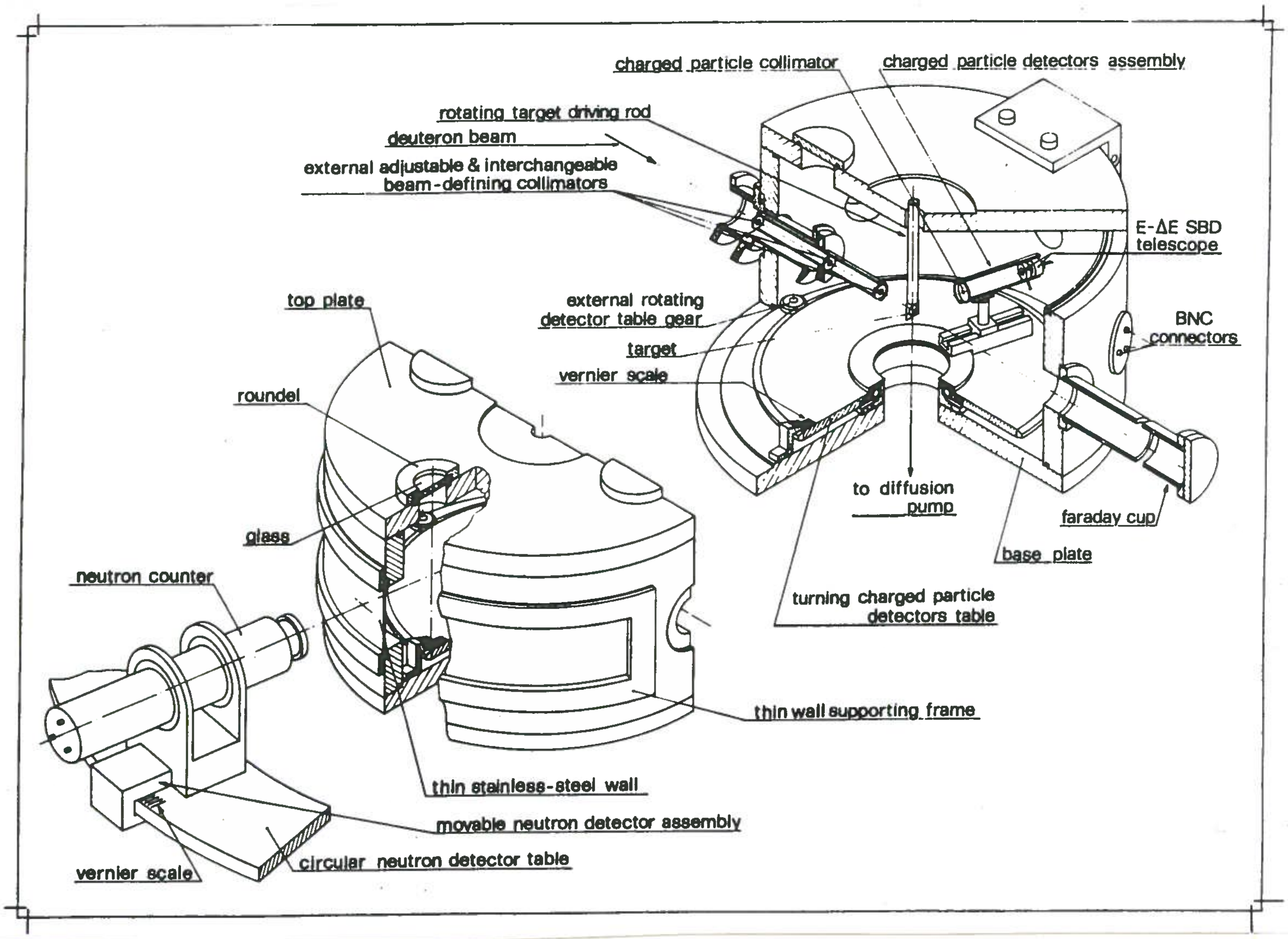

Fig. 1 - Vacuum Scattering Chamber Schematics.

2.1 External Cilindrical Body With Interchangeable Large Thin Window

The mainframe of the scattering vacuum chamber is a 50 cm diameter stainless steel cilinder, 24.2 cm long, supporting a pivoted (opening) aluminium plate as a cover, and closed at the bottom by a screwed stainless steel plate (Fig.1).
This whole unit with other accessories, including the vacuum system and the neutron detector mounting, rests on a thick rectangular aluminium table supported by a wheeled steel tube structure, which can be anchored to the floor with three aligning screw pins.

The cilinder walls are made from 3.1 cm thick stainless steel, having a one-sided 137°, 10 cm height, rectangular cut, with a near edge O-ring seal, designed for fixing the thin wall sheet used as neutron window (Fig. 1).
The thin stainless steel or aluminium windows are interchangeable (0.5 ÷ 2 mm), being fixed against the chamber´s wall by a removeable bented steel frame which is attached to it by screws.

The chamber is provided with seven radially oriented circular ports, two of which serve as entrance and exit ports for the beam. The other five, 10 cm diameter, multipurpose ports, are centered at 30°, 60°, 90°, 120° and 150° degrees with respect to the beam direction, and at opposite side to the neutron window.
Two of these ports have a roundel provided with BNC feedthroughs for the detector connections and another one is being used as a viewing port.

The beam dump extension consists of a 2.2 m long, 12 cm diameter tube, provided with a Ta foil at its end, and attached to the chamber by a smaller (50 cm long, 4 cm diameter) electrically isolated tube.
This unit serves also as a Faraday cup, long enough to produce a low gamma and neutron background near the neutron window.

2.2 Rotating Target Assembly

Since polyethylene is a low temperature burning material, a rotating target assembly is a convenient solution to avoid fast deterioration.

Figure 2 show a schematic drawing of the rotating target assembly, illustrating how a two-dimensional motion (perpendicular to the beam) is achieved with a flexible bellow.

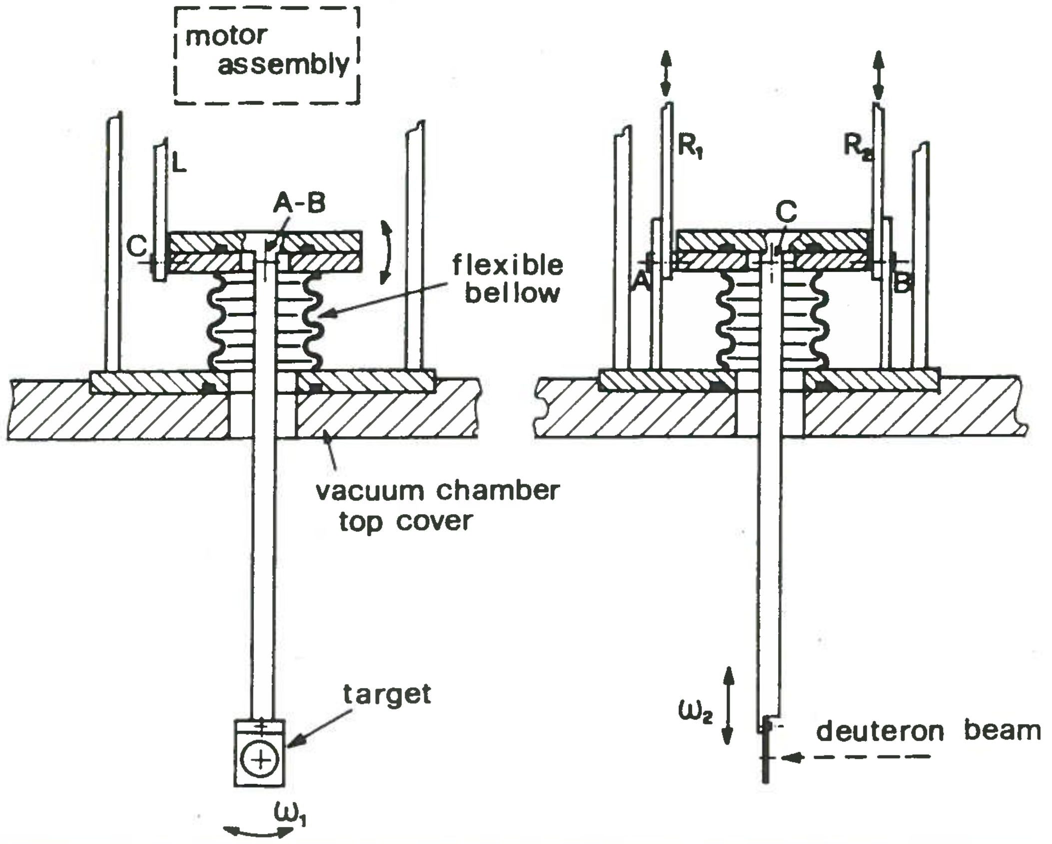

Fig. 2 - Rotating Target Assembly Schematics.

An electric motor (not shown in Fig.2) transmits (a) a tilting and (b) an up and down movement to the cover flange of the air tight bellow vessel. This then originates a horizontal and an up and down movement of the target frame, attached to this flange through a long driving metal rod. A proper choice of the frequencies ω_1 and ω_2, and the amplitudes of each these componentes of motion, permits a uniform and long lifetime use of the targets.

The movement imposed by our arrangement permits an adjustable rectangular scan of the beam over the target, which, for practicle reasons, we chose a

3x5 mm^2 scanning area, and angular frequencies ω_1 and ω_2 (see Figure 2) as 0.628 and 0.118 Rad/sec, respectively.
Another important feature is that the target assembly can be rotated as a whole along its axis, permitting an adjustment of the target-beam angle in order to minimize charged particle energy losses and straggling effects.

2.3 Charged Particle Detector Table

This part consists basically of a flat circular geared stainless steel plate intended for the charged particle detector mounting and positioning. This detector table is attached to the chamber's base plate with a bearing shaft mechanism, which permits a 360° rotation around its axis.
The angular displacement is accomplished via an air-tight small gear coupling; a particular setting is viewed, through an on-top glass observation port (Fig.1), on a 0.5° scale engraved around the table's edge.
The detector mounting assembly permits a continuous radial positioning of the charged particle detector-collimator system; it is attached to the table plate by spacer blocks which slide along radially oriented rails.
The detector-collimator housing consists of an aluminium cilinder which allows the use of two interchangeable slits and a "E-ΔE" detector arrangement (Fig.1).

2.4 Beam Collimator System

The beam defining collimator (see Figs.8-A and 9-A in Appendix) is a 24 cm long tube structure supported by a double flanged pipe coupling attached to the entrance port of the chamber (see Fig. 1).
The three slits used are mounted on the extremes of two concentric stainless steel tubes. The largest exterior tube (24 cm long) is supported near its center, with a knuckle-joint mechanism, by the double flanged pipe, which is fixed to the chamber wall's entrance port by screws, with four adjusting pins to set the first slit (mounted on this tube's extreme) in proper position. The other two slits are mounted on the extremes of an

internal 15 cm tube, attached and housed in the longer tube just described. The knuckle-joint mechanism permits aligning these two slits along the beam line direction without changing appreciably the former slit's location.

2.5 External Table Plate With Slidding Neutron Detector Mounting Assembly.

The external chamber's table is a rectangular 100 cm x120 cm aluminium plate (1.5 cm thick),intended for supporting the vacuum chamber and the neutron detector mounting assembly.

The detector mounting assembly consists of a three parallel plate slidding structures with three degrees of freedom for fixing the height, the distance and the angle of the neutron spectrometer in relation to the reaction plane, the target position and the beam direction.

The detector's carriage unit consists of two parallel rectangular plate structures, connected by four stainless steel guiding rods and a screw mechanism, designed for adjusting the scintillator height.

The detector is fixed on the moving upper plate by two metal collars, and the height of the detector is measured on a graduated 15 cm long scale.

This carriage base plate is supported by a bearing mechanism, which permits moving the carriage unit as a whole along two radially oriented tracks fixed to another bigger rectangular plate. This last movement permits adjusting the detector-target distance, which is read on a 30 cm graduated scale.

The angular setting of the neutron detector is achieved by a frictionless bearing mechanism which permits rotating the entire mounting along a 170° flat ring track (10 cm wide) concentric to the vacuum chamber. A particular setting is read on a 0.5° scale engraved around the external edge of the ring.

The schematics of the detector mounting assembly given in Fig. 1 is much simplified, illustrating only one of the three degrees of freedom provided by the actual unit.

2.6 Automatic Vacuum System

The automatic vacuum system consists basically of rotary-diffusion pump arrangement operated automatically by an EDWARDS' model Controller 1105 Pirani-Penning unit [8].
The 300 l/s diffusion pump, provided with a pneumatically operated butterfly valve, is located just beneath the vacuum chamber matching a central hole on the base plate. This pump is connected with rotary mechanical pump through a two-way pneumatic valve, which permits a roughing cycle of the chamber by an alternative steel pipe. Both these valves, and a third one for air admittance, are operated automatically by the Controller unit according to previously programmed pressure settings.

3 PRELIMINARY TESTS AND PERFORMANCE

Once the chamber parts were cleaned and assembled, and the whole apparatus was aligned in the +30° beam line of the Van de Graaff 7 MV CN Accelerator, the vacuum tests reported a final $2x10^{-6}$ Torr pressure normally achieved after 30 min.

For a given neutron energy, the neutron profile and the time resolution of the system depend on various kinematical and geometrical parameters concerning the deuteron beams' energy and spot, the targets' thickness and composition, and the charged particle's solid angle charateristics.
The following experimental conditions for the tests were set according to the compromise which arises between a good time resolution and a high neutron counting rate.

In order to obtain a 2 mm diameter deuteron beam spot over the target we used a three circular slit arrangement with the following diameters: 3 mm entrance one, 1.8 mm middle one and a 2.5 mm exit one; which once in proper alignment allows us to obtain a 500 nA current on the Faraday cup extension.

The charged particle "ΔE" detector, chosen in agreement with the ^{3}He (^{4}He) range, and located at 18 cm from the target, was provided with a pair of limiting circular slits of 1.6 mm (entrance) and 2.2 mm diameters, 3.5 cm apart from each other, in order to have a neutron cone contained in the 3.81 cm diameter (1.27 cm long) stilbene spectrometer.

Figures 3-a) and 3-b) illustrates the pulse shape discrimination spectra ($n-\gamma$) taken with a tipical electronic arrangement and the stilbene detector using the $D(d,n)\,^{3}He$ reaction for E_d=5.5 MeV, E_n=4.409 MeV and θ_n=80.20° and using the $T(d,n)\,^{4}He$ reaction for E_d=6.0 MeV, E_n=18.194 MeV and θ_n=72.47°. The figures of merit obtained were F_1 =1.29 and F_2 =1.17, respectively.

In Figure 4 a time-of-flight (ToF) spectrum is shown, which illustrates the time correlation between the neutrons and the associated ^{3}He's, as obtained from the fast stilbene (stop) pulses using a time-to-amplitude-converter for a $D(d,n)\,^{3}He$ reaction with E_d=4.0 MeV, $E_{^{3}He}$=3.154 MeV, E_n=4.115 MeV and θ_n=76.49°. The FWHM was 2 nsec.

Figure 5 show a vertical and horizontal measurement of the neutron profile taken from a $D(d,n)\,^{3}He$ reaction for E_n=2.41 MeV, (E_d=2.0 MeV). The profiles are taken at a distance of 30.6 cm from the target, and the vertical scales give a relative measure of ToF to ^{3}He counts.

The thickness of the 137° large thin stainless steel window used during the tests was 2 mm.

4 CONCLUSIONS.

The properties of the APT Chamber described in this paper are largely adequate for accurate measurements in the neutron physics field.

The Chamber was used by a CERN team for measurement of the neutron detection efficiency of an Time-of-flight Scintillator Hodoscope [9-10] and by some of us for the measurement of the absolute detection efficiency of

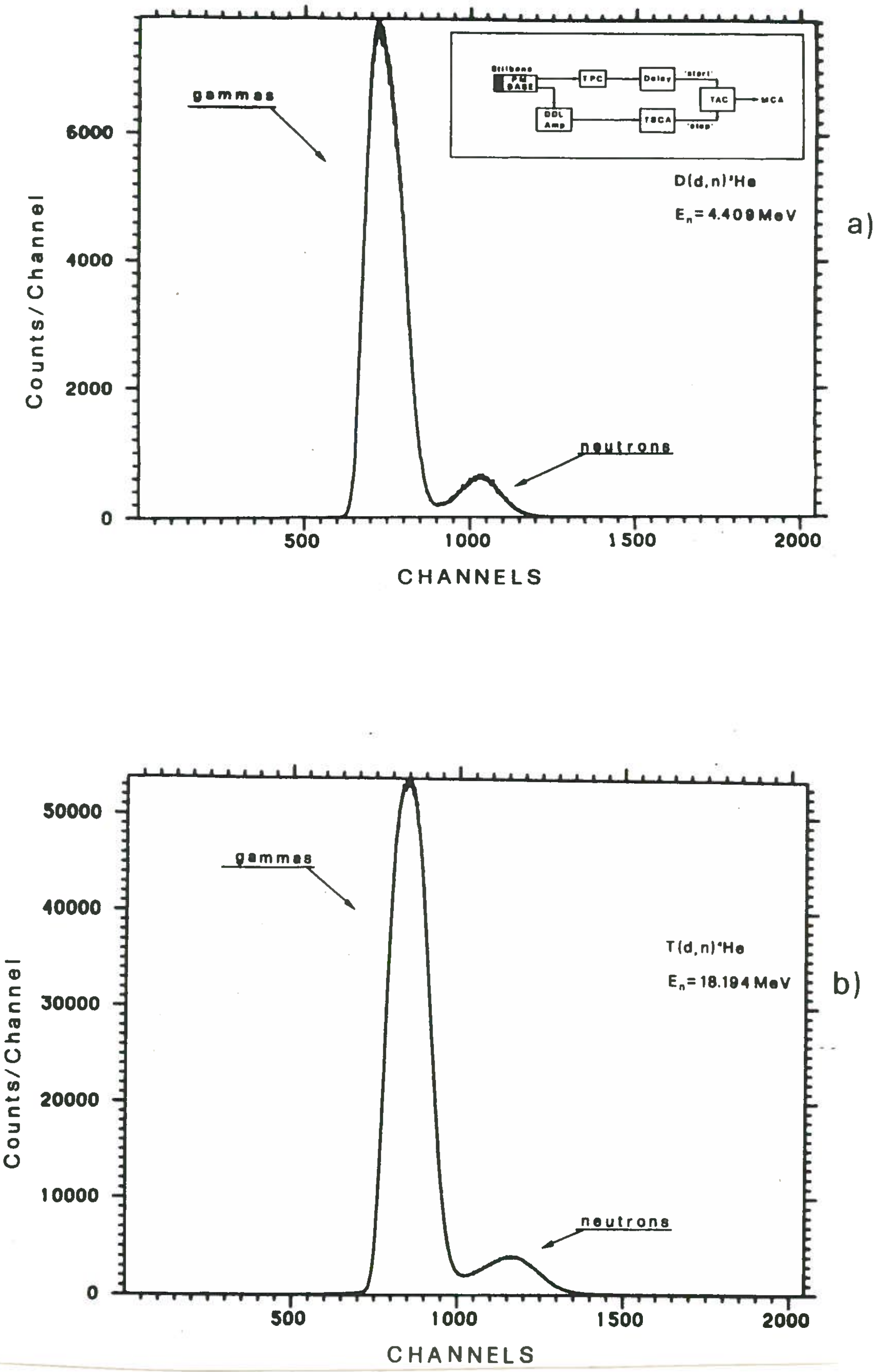

<u>Fig. 3</u> - Neutron-Gamma Spectra taken with a typical electronic arrangement and the 3.81 cm x 1.27 cm stilbene detector using a) the D(d,n)^{3}He reaction for E_d = 5.5 MeV, E_n = 4.409 MeV and Θ_n = 80.20°; b) the T(d,n)^{4}He reaction for E_d = 6.0 MeV, E_n = 18.194 MeV and Θ_n = 72.47°. The figures of merit obtained were F_1 = 1.29 and F_2 = 1.17, respectively.

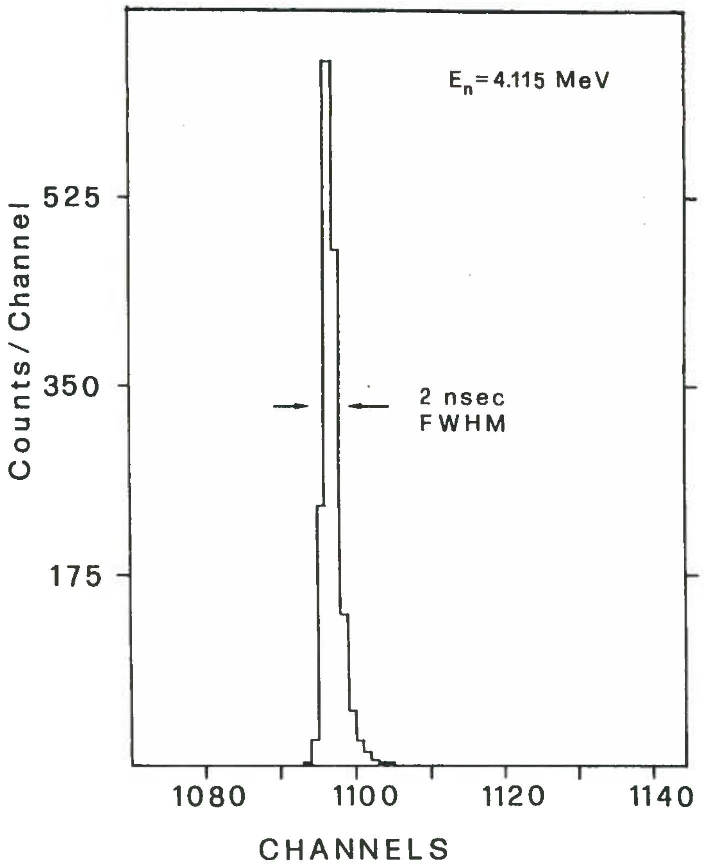

Fig. 4 - ToF Spectrum obtained using the $D(d,n)^3He$ reaction for E_d = 4.0 MeV, $E_{^3He}$ = 3.154 MeV, E_n = 4.115 MeV and Θ_n = 76.49°. The FWHM obtained was 2.0 nsec.

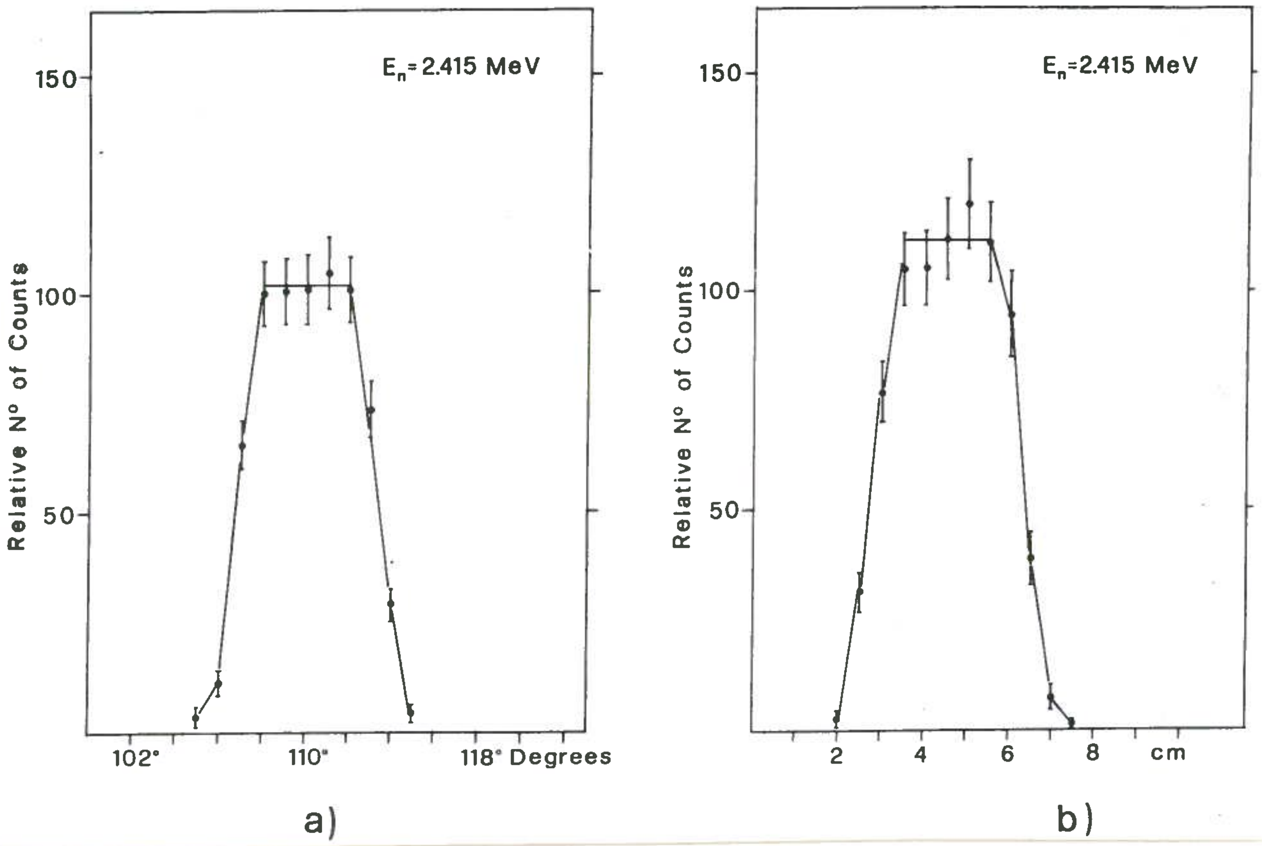

Fig. 5 - (a) Horizontal and (b) Vertical profiles taken from the $D(d,n)^3He$ reaction for E_n = 2.415 MeV (E_d = 2.0 MeV) with the detector at 30.6 cm from the target.

the 3.81cm x 1.27cm stilbene detector for neutrons in energy range 2÷18 MeV [11].

In a near future this APT Chamber will be also used at the XTU - TANDEM Accelerator of the L.N.L..

We wish to thank Mr M. Zago for his helpful suggestions in designing the Chamber and for his neat drawings; Mr I. Motti, operator of the CN Accelerator, for his cooperation; Mr L. Badan and Mr G. Bressanini for their technical assistence in mounting the automatic vacuum system of the Chamber, and finally the mechnical and electronic workshops staff of the L.N.L..

REFERENCES

1. CINDA 83, IAEA, VIENNA (1983).

2. WRENDA 83/84, Ed. V. Piksaikin, IAEA,VIENNA Austria, Nov. 1983, INDC(SEC)-88/URSF.

3. H.H.BARSCHALL,L.ROSEN,R.F.TASCHEK and J.H.WILLIAMS, Rev. Mod. Phys., 24(1952)1.

4. J.L. FOWLER, J.A. COOKSON, M. HUSSAIN, R.B. SCHAWRTZ, M.T. SWINHOE, C. WISE and C.A. UTTLEY, Nucl. Instr. and Meth., 175(1980)449.

5. C.M. BARTLE, D.W. GEBBIE and C.L. HOLLAS, Nucl. Instr. and Meth., 144(1977)437.

6. C.M. BARTLE, F.D. BROOKS, D.T.L. JONES, W.R. McMURRAY and R. VERBRUGGEN,
Nucl. Instr. and Meth., 180(1981)165.

7. R. L. HAGENGRUBER,
Measurements of neutron cross section and polarizations using the associated particle method.
PH.D. Thesis, University of Wisconsin, 1972, unpublished.

8. EDWARDS' Instructions, 07-D386-35-880 (March 1983).
EDWARDS HIGH VACUUM, Manor Royal, Crawley, West Sussex RH10 2LW, England.

9. T. BRESSANI, M. CARIA, S.SERCI, F. IAZZI, B. MINETTI, E. CHIAVASSA, S. COSTA, G. DALLACASA, N. DE MARCO, M. GALLIO, A. MUSSO and P. FASSNACHT,
Nucl. Instr. and Meth., 221(1984)355.

10. P. MACIOTTA et al.,
A large area, fine grained, neutron hodoscope.
in Proc. of the IEEE 1985 NUCLEAR SCIENCE SYMPOSIUM,
S. FRANCISCO, California - U.S.A., Oct. 1985.

11. To be published.

APPENDIX

The following figures are taken from workshop drawings.

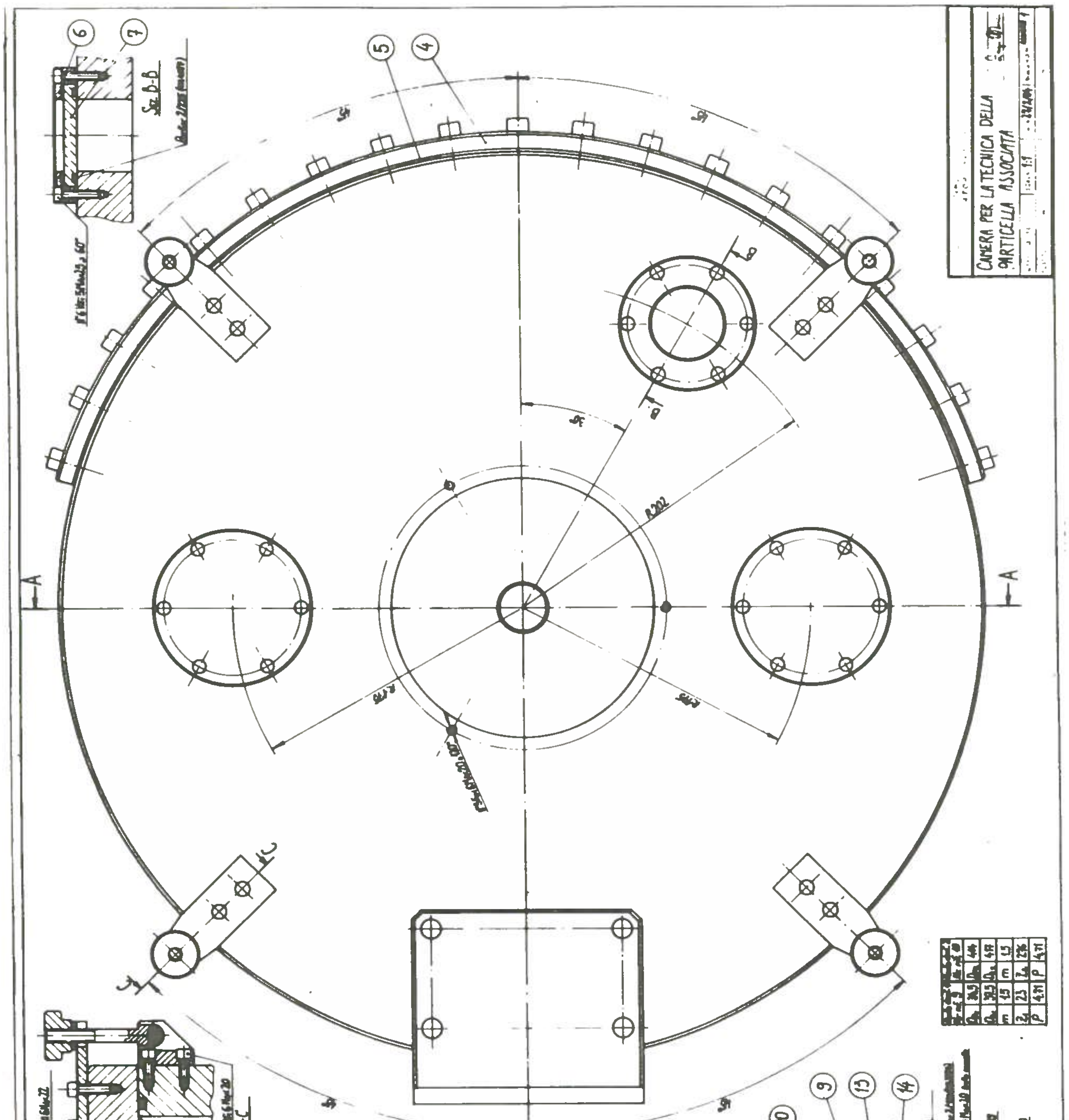
CAMERA PER LA TECNICA DELLA
PARTICELLA ASSOCIATA
1:1
Sez. A-A
Sez. B-B
Sez. C-C
A
A
C
R 302
①
②
③
④
⑤
⑥
⑦
⑧
⑧
⑨
⑩
⑪
⑫
⑬
⑭
350
305

Fig. 1 - A

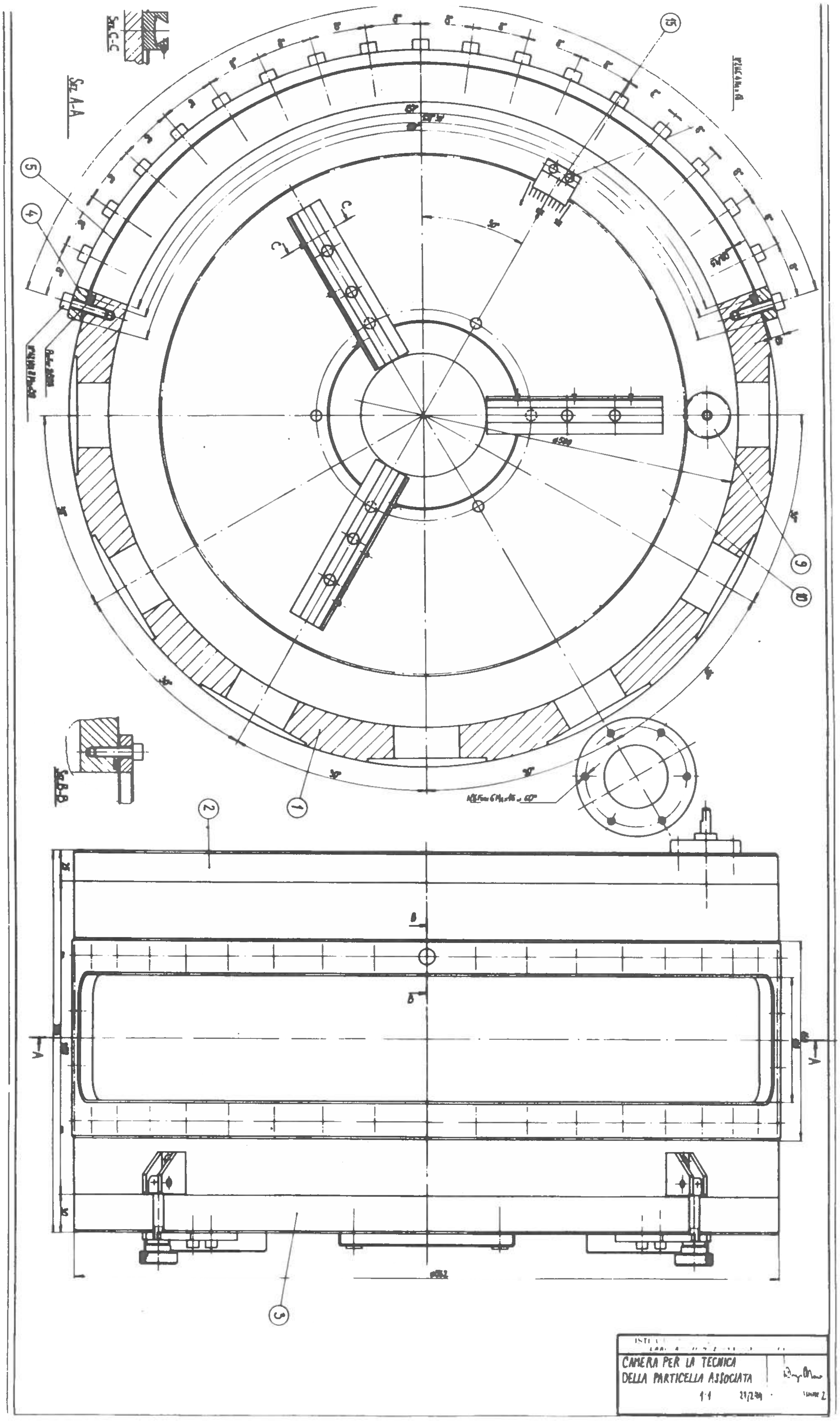
Sez. A-A
Sez. B-B
Sez. C-C
C
B
A
1
2
3
4
5
9
10
15
CAMERA PER LA TECNICA
DELLA PARTICELLA ASSOCIATA
1:1
27/2/79

Fig. 2 - A

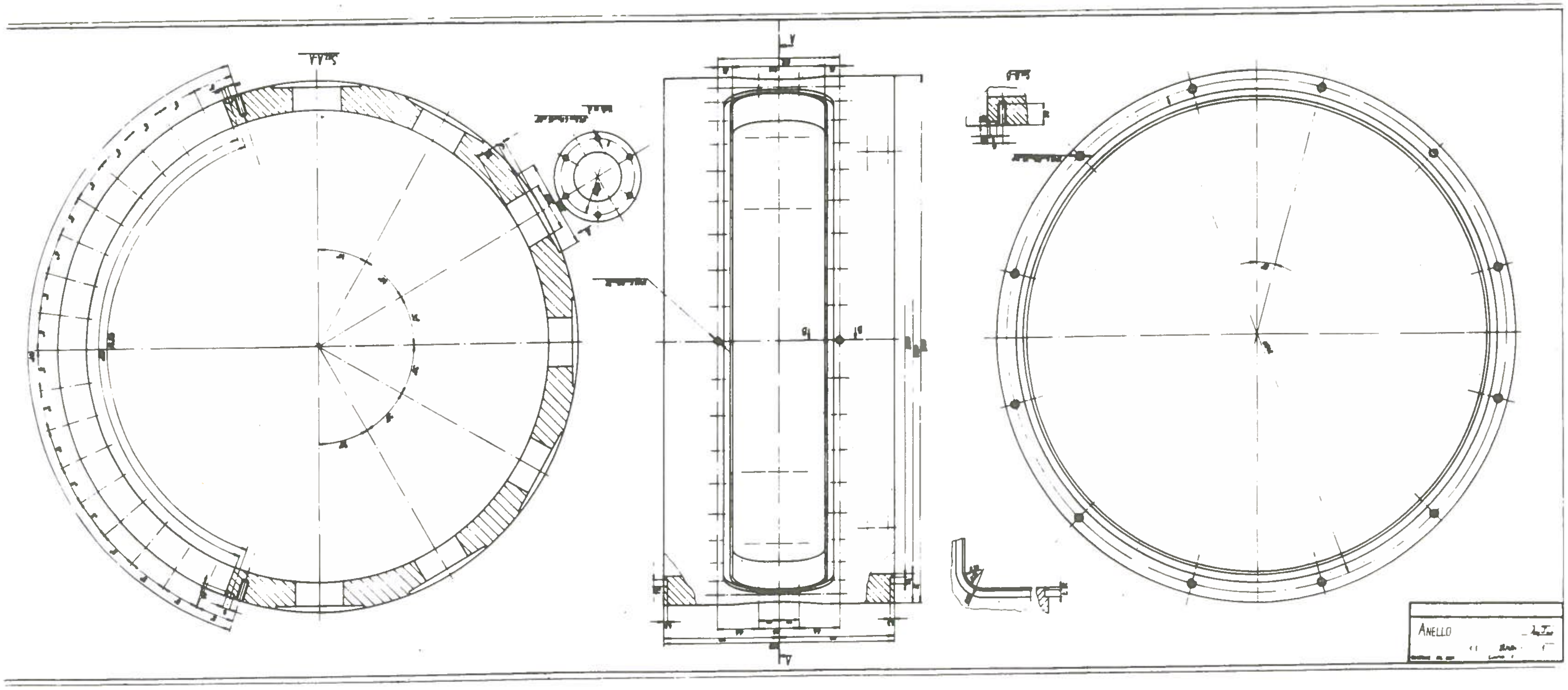

Fig. 3 - A

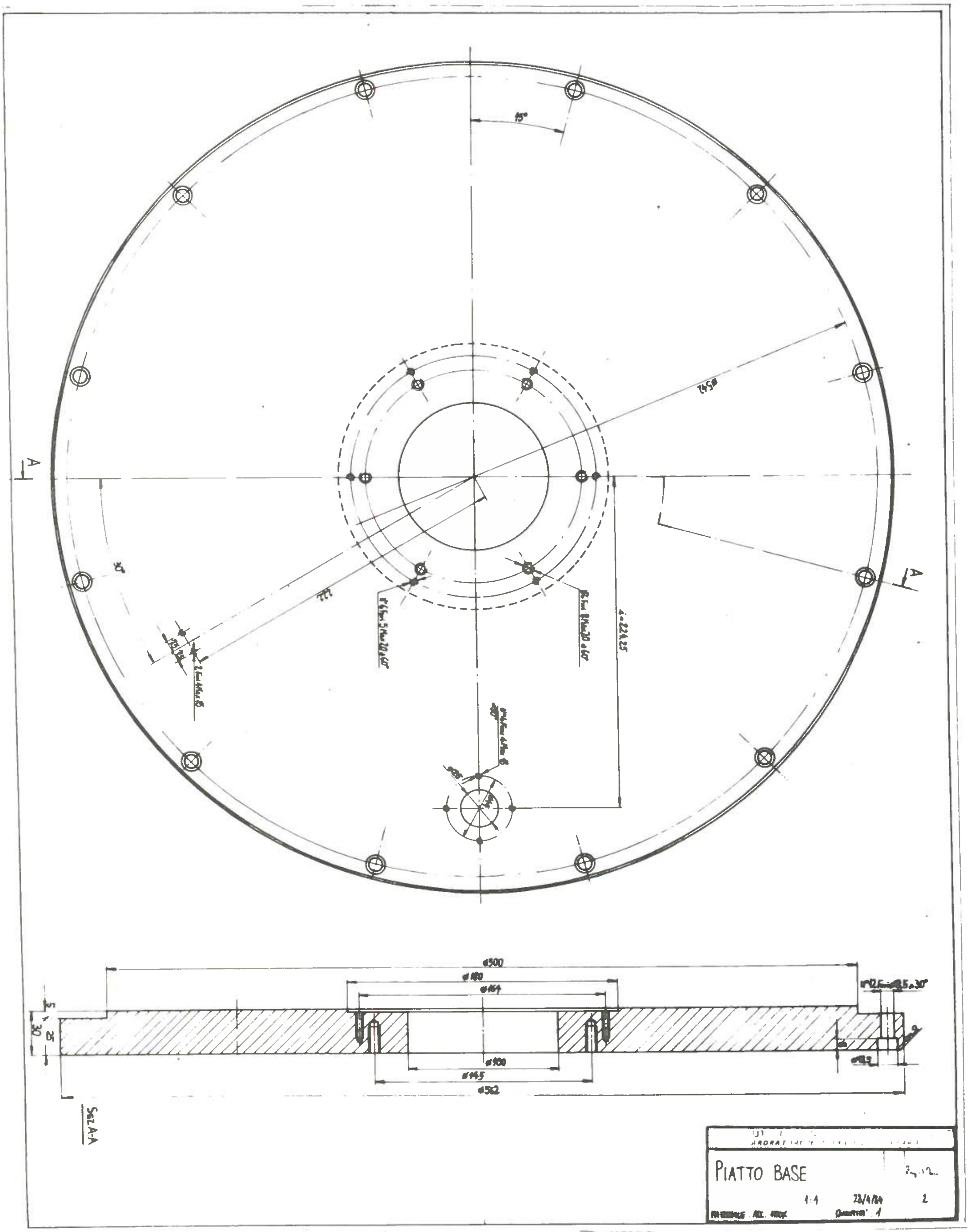
A
A
15°
30°
ø500
ø180
ø164
ø100
ø145
ø562
30
25
5
Sez.A-A
PIATTO BASE
1:4
23/4/84
2
MATERIALE ACC. INOX
QUANTITA' 1

Fig. 4 - A

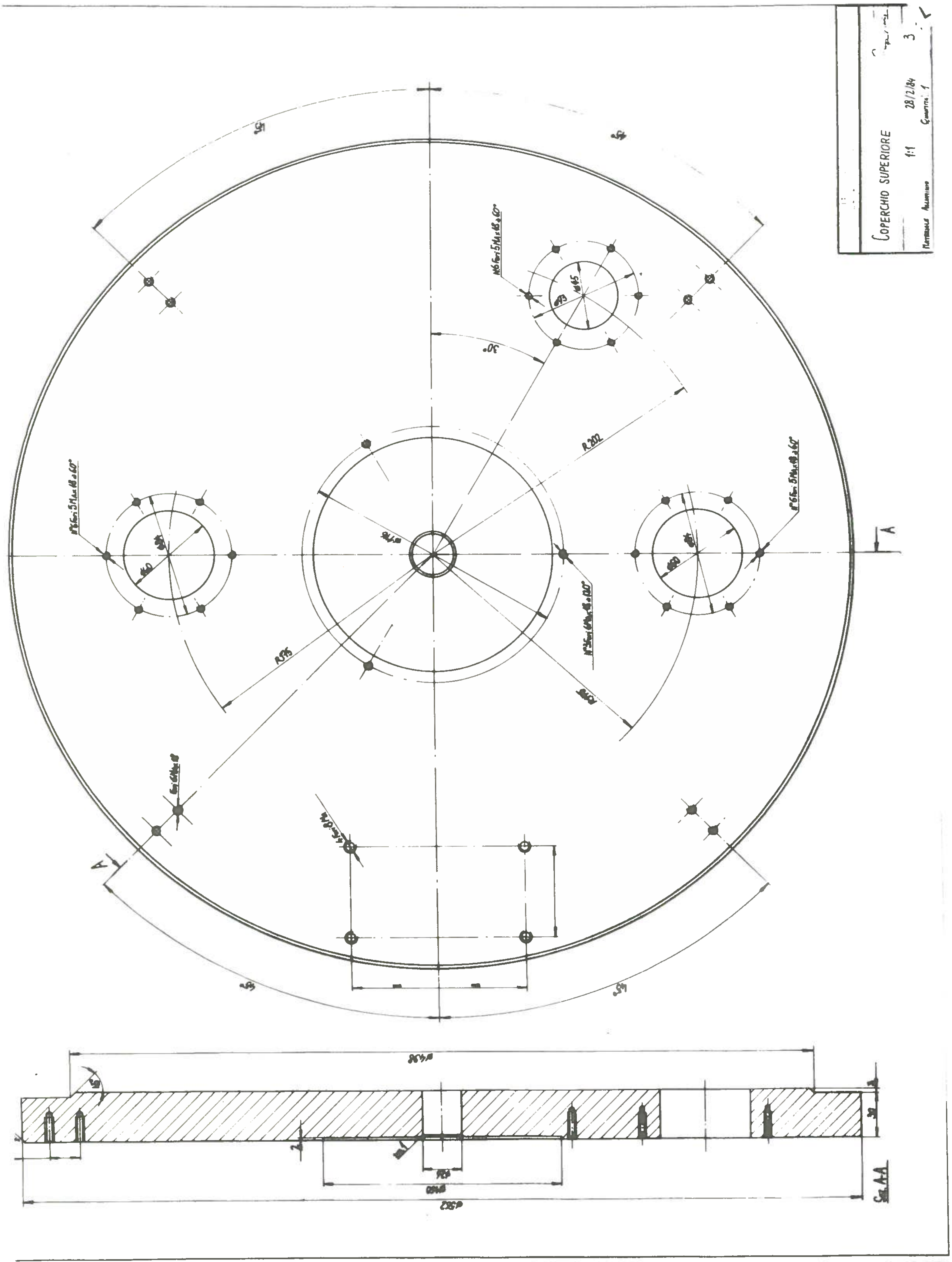
COPERCHIO SUPERIORE
1:1
28/2/84
3
MATERIALE ALLUMINIO
QUANTITÀ 1
30°
R 202
45°
A
A
SEZ. A-A

Fig. 5 - A

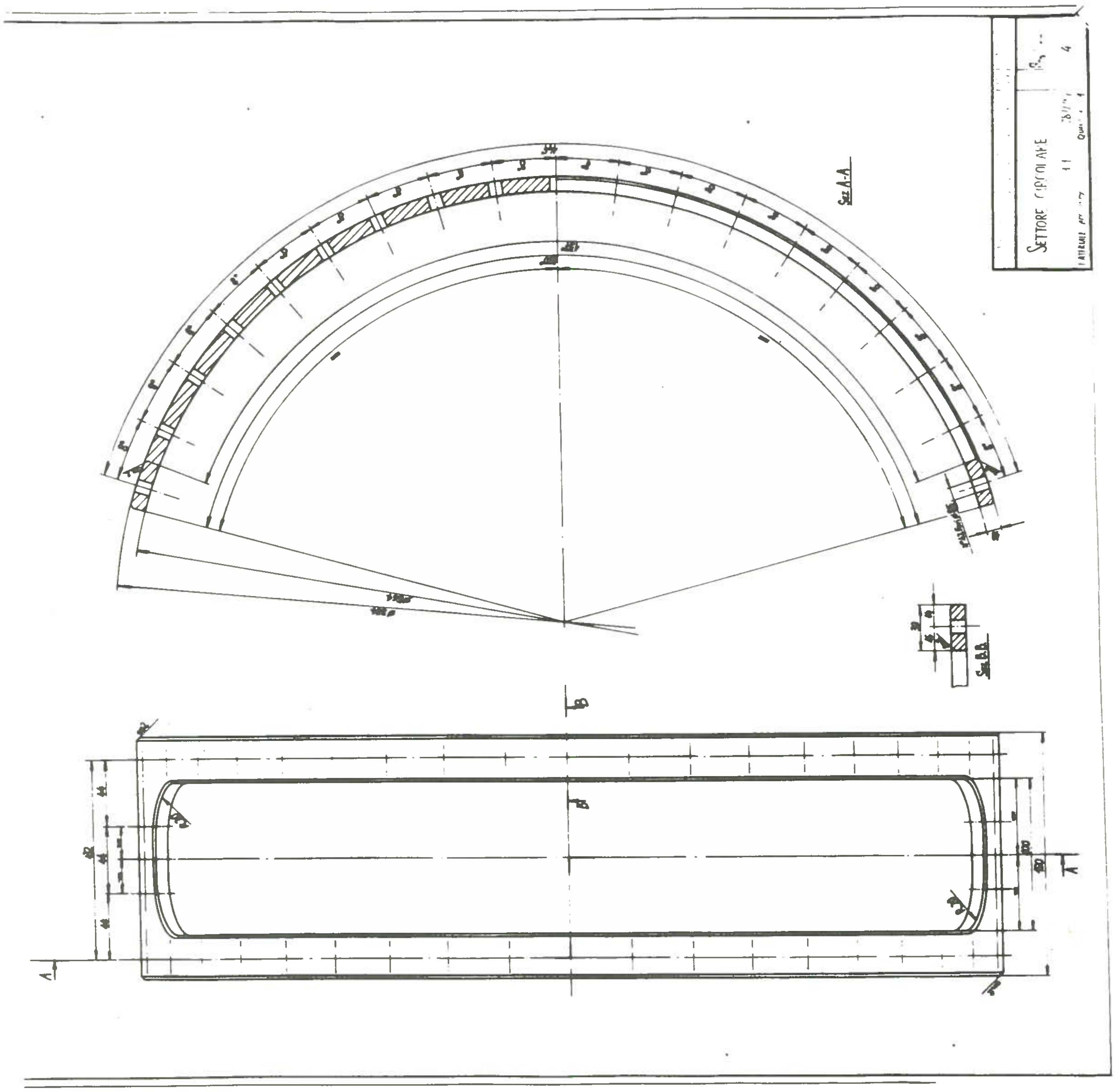

Fig. 6 - A

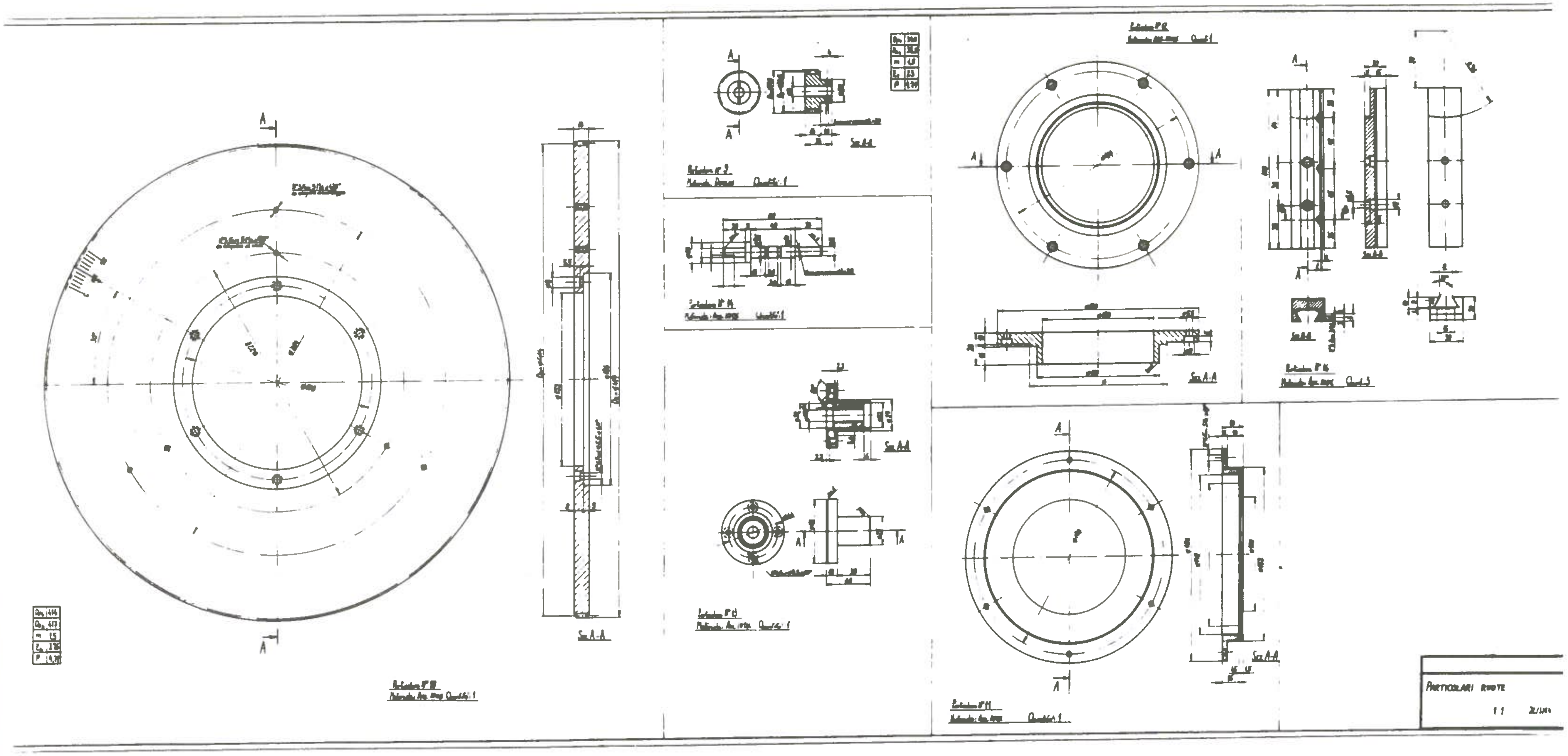

Fig. 7 - A

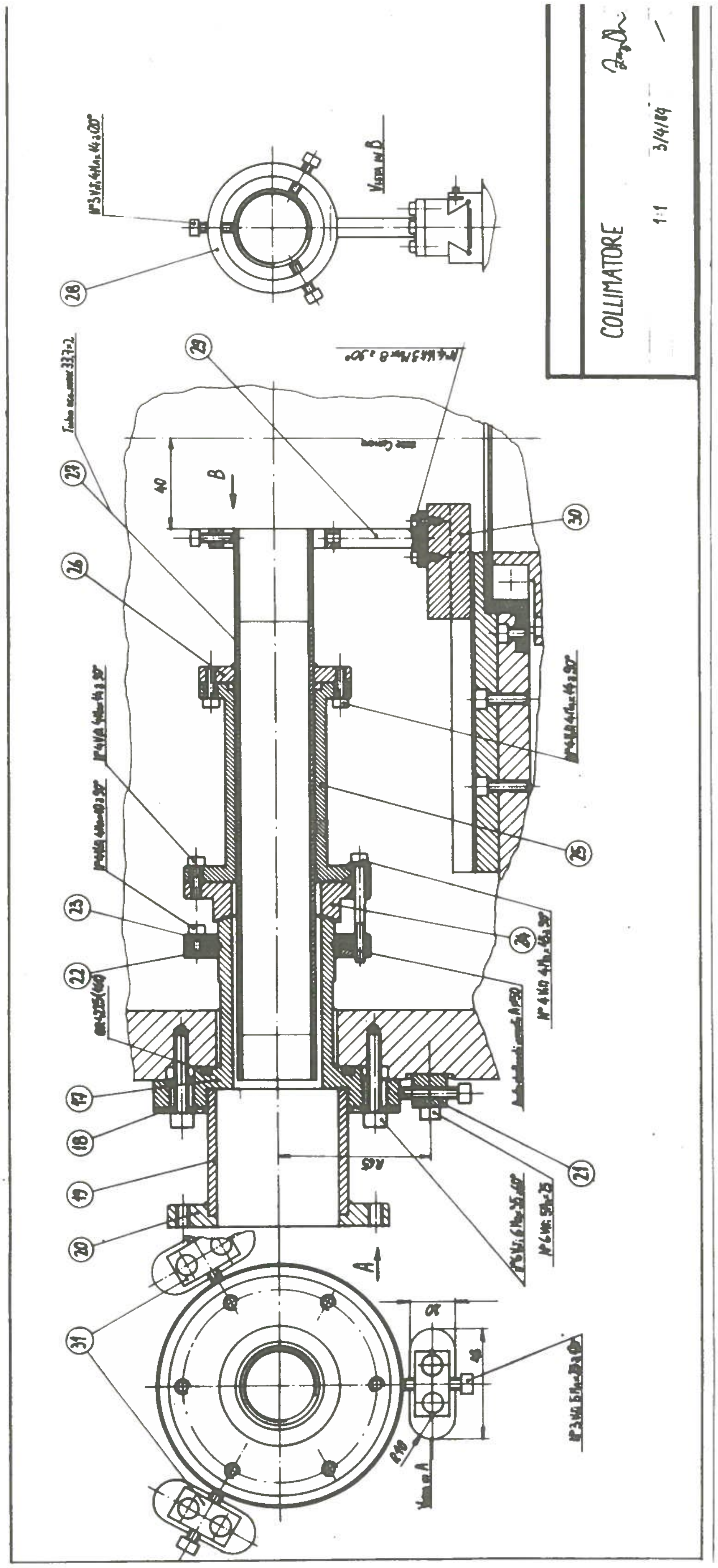
COLLIMATORE
1:1
3/4/84
A
B
40
Vista in B
Vista in A
17
18
19
20
21
22
23
24
25
26
27
28
29
30
31

Fig. 8 - A

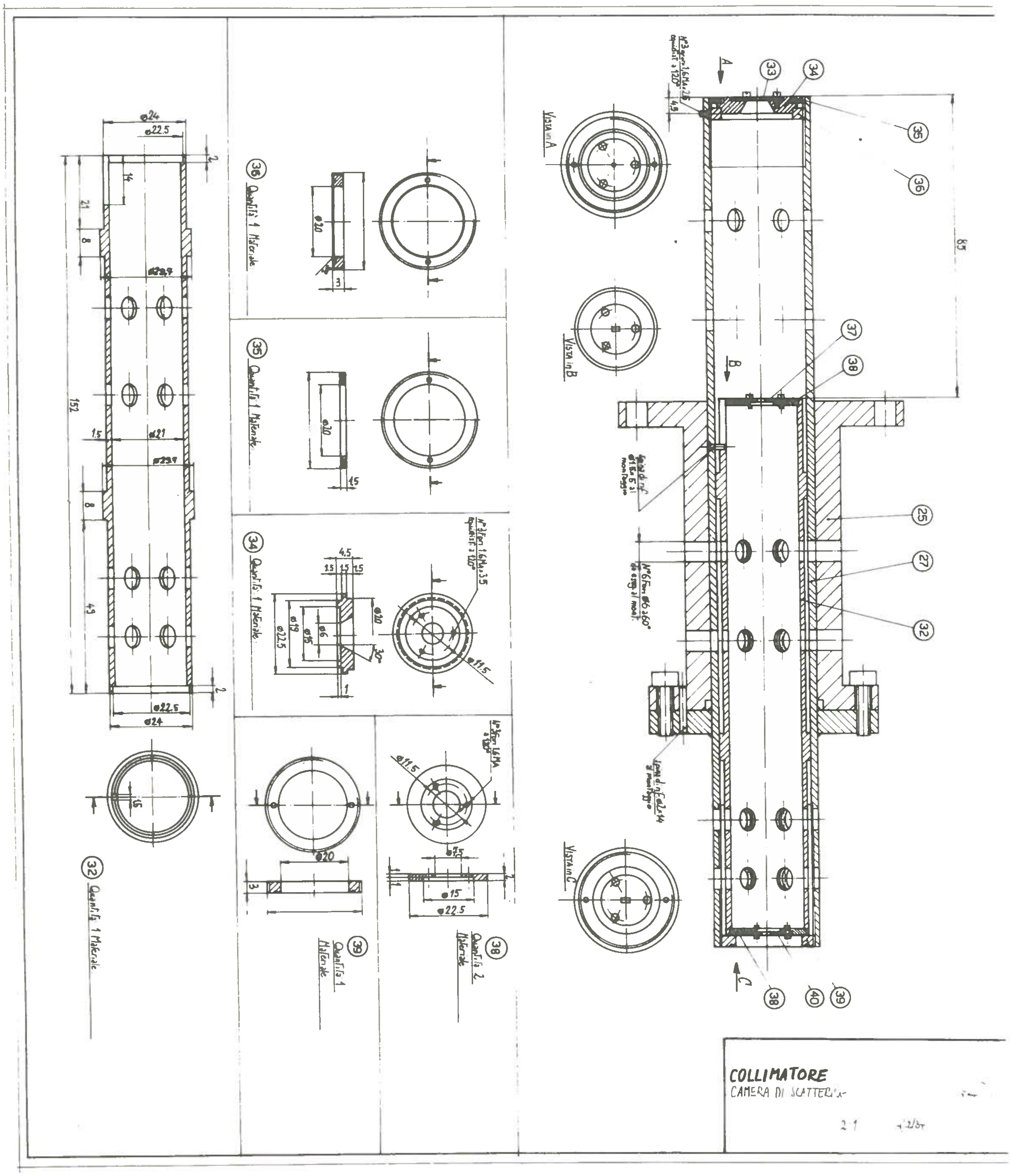
COLLIMATORE
CAMERA DI SCATTERI
2:1
Vista in A
Vista in B
Vista in C
A
B
C
32 Quantità 1 Materiale
34 Quantità 1 Materiale
35 Quantità 1 Materiale
36 Quantità 1 Materiale
38 Quantità 2 Materiale
39 Quantità 1 Materiale
25
27
32
33
34
35
36
37
38
39
40
ø24
ø22.5
ø21
152
49
85
4.5
ø11.5
ø20
ø15
30°

Fig. 9 - A

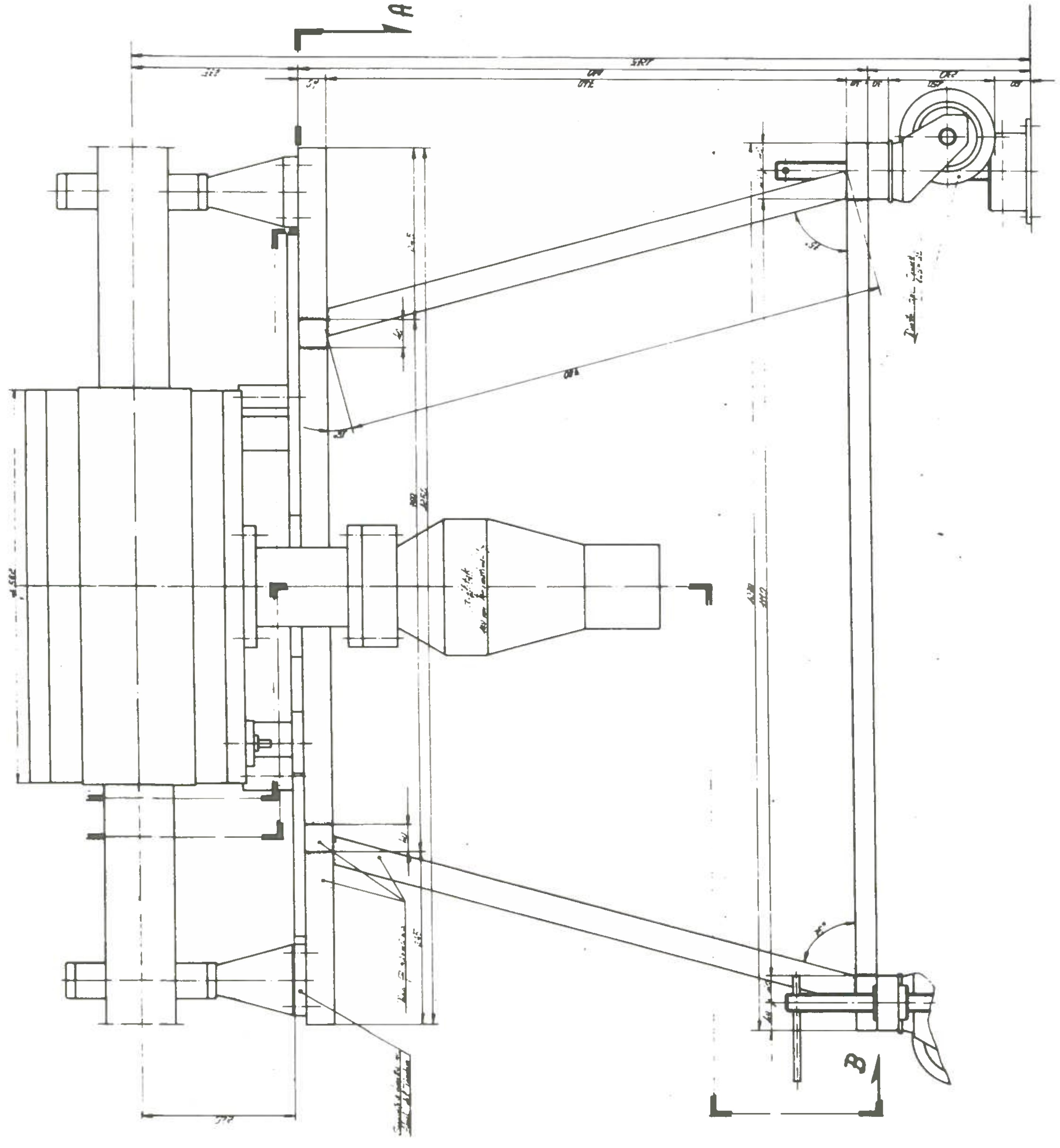

Fig. 10 - A

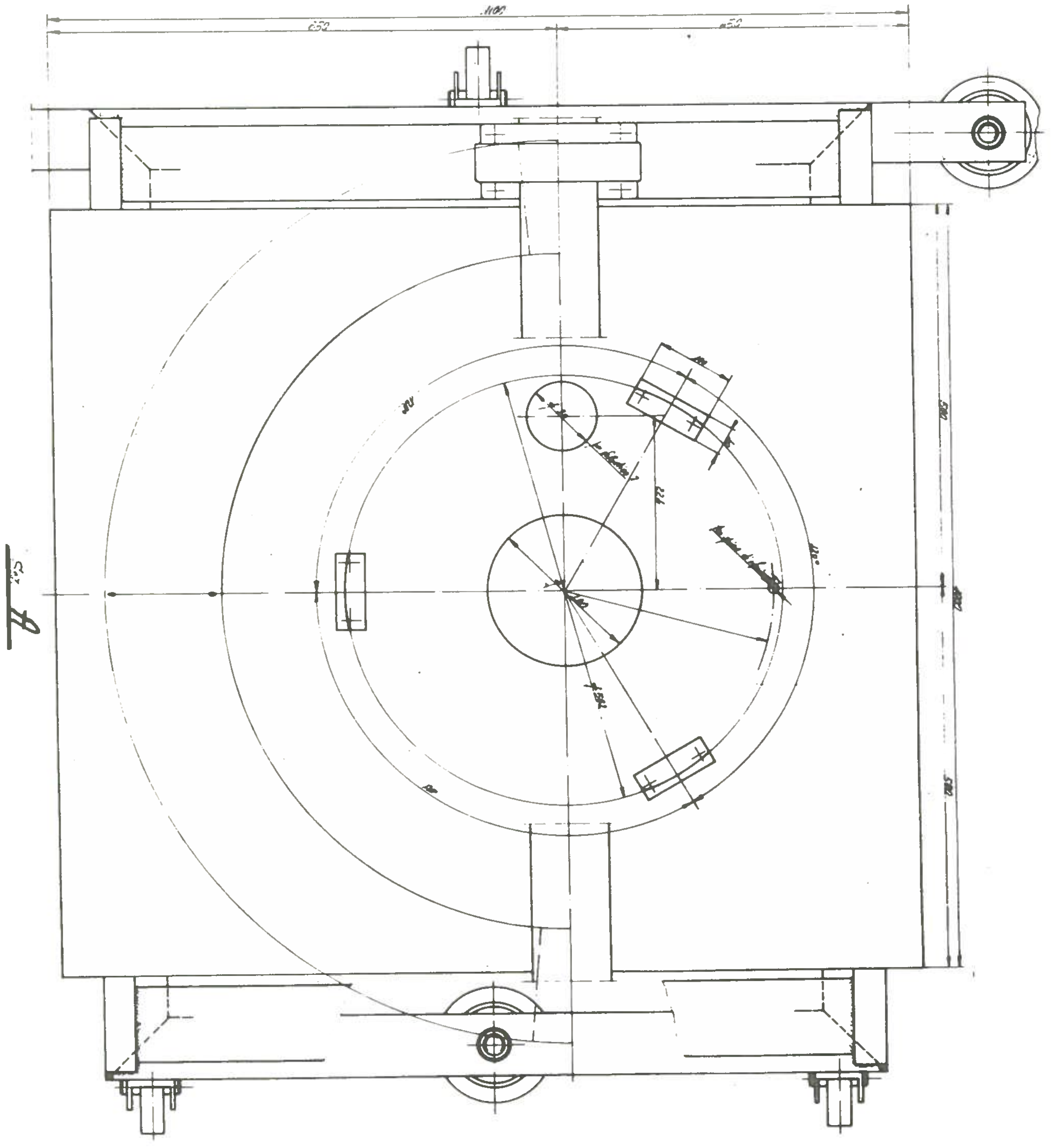

Fig. 11 - A

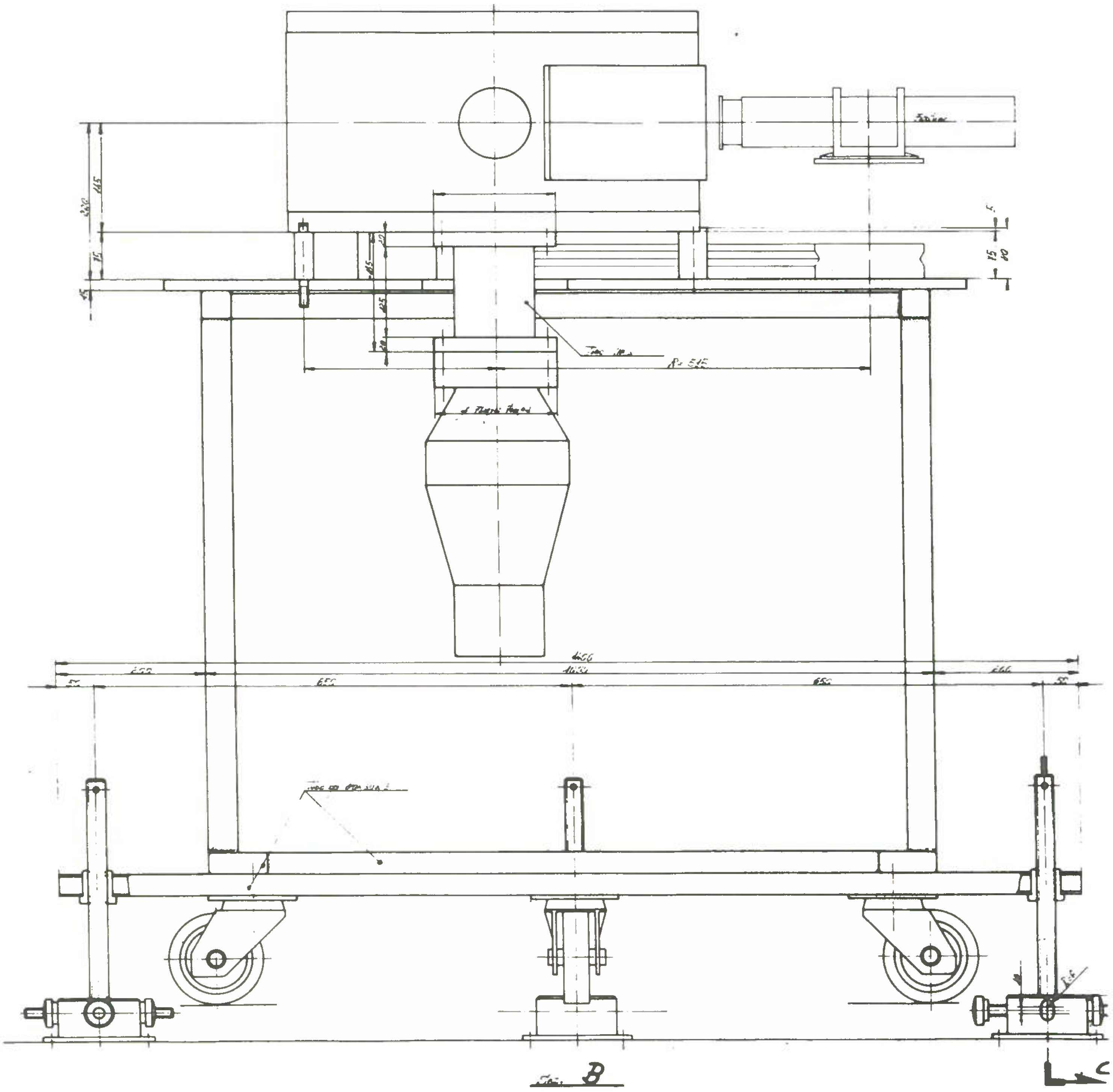

Fig. 12 - A