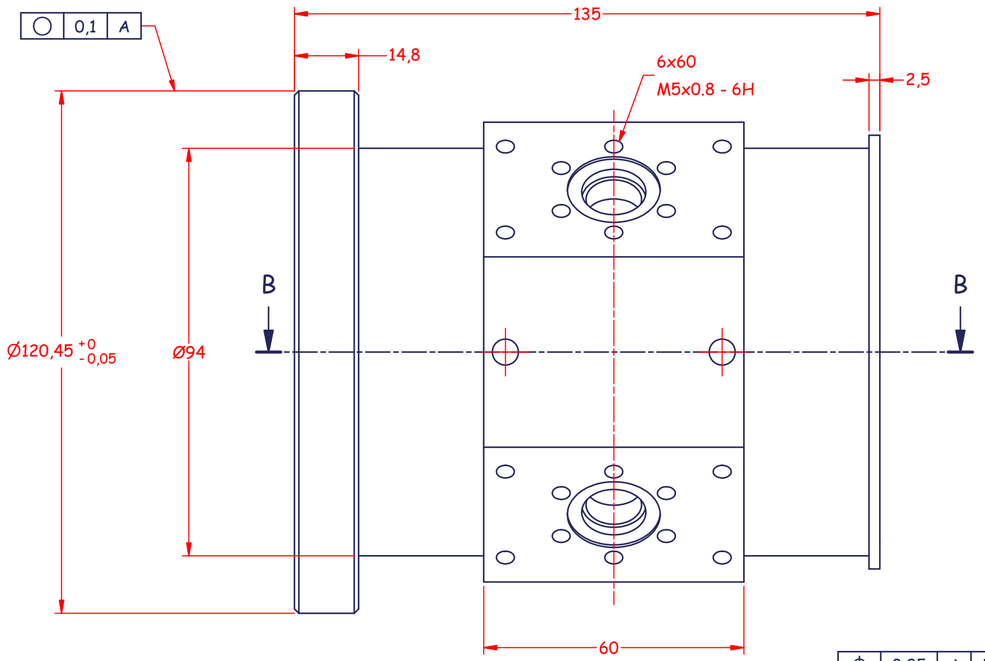

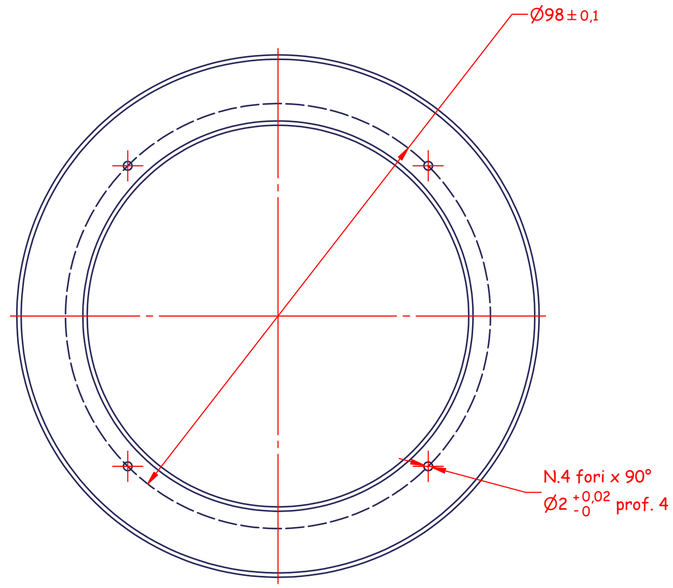

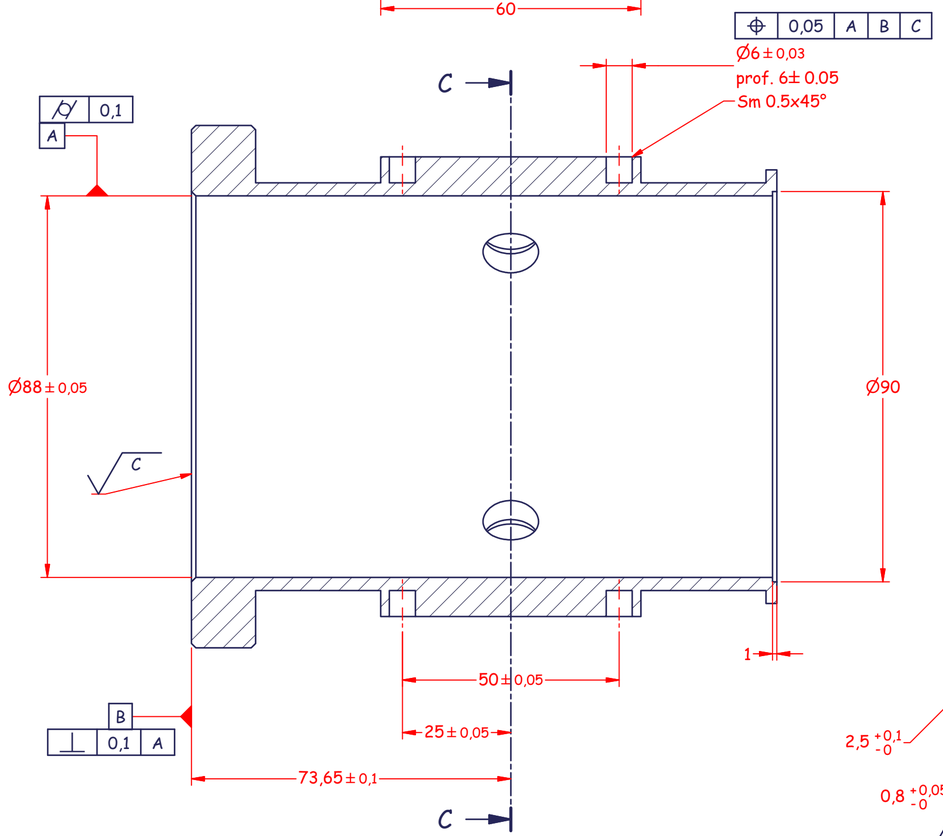

B-B (1 : 1)

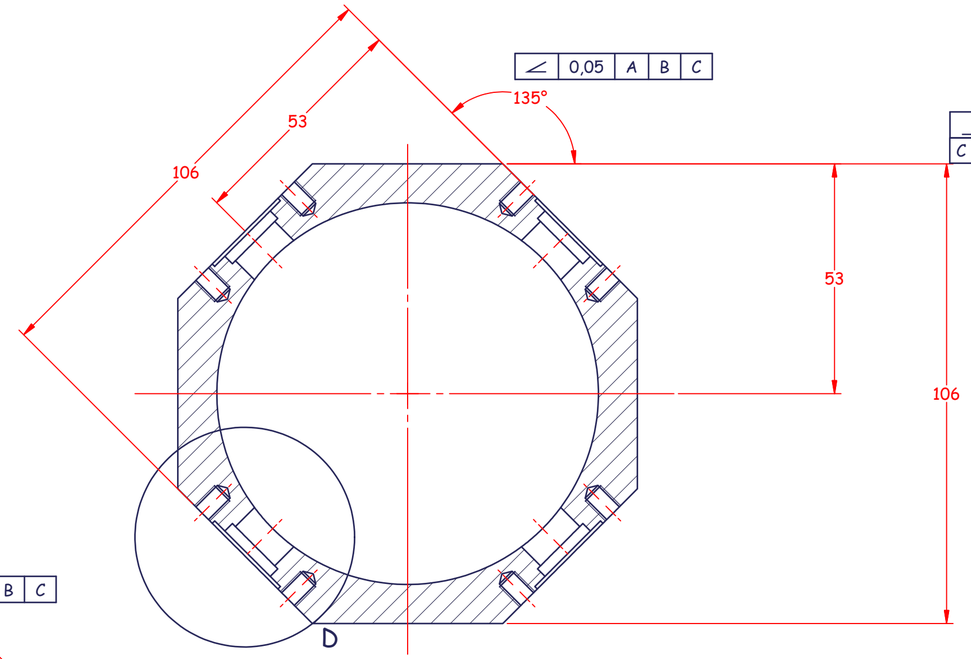

C-C (1 : 1)

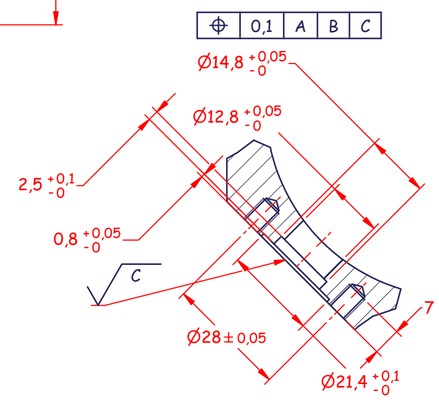

D (1 : 1)

FINISH	NEXT ASSY DWG	QUANT.	NOTE
GENERAL TOLERANCES UNI EN 22768/1-MEDIUM			
04-11-2009	AL6082		
DATE	MATERIAL	WEIGHT	SCALE
VACUUM	DIAGNOSTIC	ACC.PHY.	ELEC. ENG.
QUALITY ASSURANCE			
	A.ZOLLA		
DRAFTER	DESIGNER	ENGINEER	APPROVAL

NATIONAL INSTITUTE OF NUCLEAR PHISICS
FRASCATI NATIONAL LABORATORY

DAFNEUP2

PS1-3-DRITTO-CAMERA

HORIZONTAL KICKERS

BPM

A2

DRAWING N. DAFNEUP2-014-006

REV